Please dispose of packaging for the product in a responsible manner. It is suitable for recycling. Help to protect the environment, take the packaging to the local amenity tip and place into the appropriate recycling bin.

Never dispose of electrical equipment or batteries in with your domestic waste. If your supplier offers a disposal facility please use it or alternatively use a recognised re-cycling agent. This will allow the recycling of raw materials and help protect the environment.

FOR HELP OR ADVISE ON THIS PRODUCT PLEASE CONTACT YOUR DISTRIBUTOR, OR SIP DIRECTLY ON:
TEL: 01509500400
EMAIL: sales@sip-group.com or technical@sip-group.com
www.sip-group.com

Ref:110714

SIP INDUSTRIAL

machinery specialists since 1968

Fireball

Propane Heater

09287, 09288, 09289 & 09291

Please read and fully understand the instructions in this manual before operation. Keep this manual safe for future reference.

EU DECLARATION OF CONFORMITY

Declaration of Conformity

SIP (Machinery Europe) Ltd
ASM Chartered Accountants
First Floor Block One
Quayside Business Park
Dundalk
County Louth
Republic of Ireland

As the manufacturer's authorised representative within the
EC declare that the

CλNJŜōl·ff опн tNJ2LJl·yŜ {LJl·ŎŜ lŜl·ǘŜNJ π {Lt tl·NJǘ b2ϕ лфнут
CλNJŜōl·ff рмн tNJ2LJl·yŜ {LJl·ŎŜ lŜl·ǘŜNJ π {Lt tl·NJǘ b2ϕ лфнуу
CλNJŜōl·ff млол tNJ2LJl·yŜ {LJl·ŎŜ lŜl·ǘŜNJ π {Lt tl·NJǘ b2ϕ лфнуф
CλNJŜōl·ff мтлс tNJ2LJl·yŜ {LJl·ŎŜ lŜl·ǘŜNJ π {Lt tl·NJǘ b2ϕ лфнфм

/2yŦ2NJYă ǘ2 ǘKŜ NJŜljdzλNJŜYŜyǘă 2Ŧ ǘKŜ Ŧ2ff2ǿλyƎ ŘλNJŜŎǘλǾŜóăǘΣ l·ă λyŘλŎl·ǘŜŘϕ

нллскфрк9/	[2ǿ ±2fǘl·ƎŜ 5λNJŜŎǘλǾŜ
нллпкмлук9/	9a / 5λNJŜŎǘλǾŜ
нллфкмпнк9/	Dl·ă !LJLJfλl·yŎŜă 5λNJŜŎǘλǾŜ
нлммкcрк9¦ l·ă l·YŜyŘŜŘ ōè 9¦кнлмркусо	w2l{ 5λNJŜŎǘλǾŜ

!yŘ ǘKŜ NJŜfŜǾl·yǘ Kl·NJY2yλăŜŘ ăǘl·yŘl·NJŘóăǘΣ λyŎfdzŘλyƎΣ

9b ррлмпπмYнллсЪ!мЪ!н
9b ррлмпπнYмффтЪ!мЪ!н
9b смлллπоπнYнллсЪ!мЪ!н
9b смлллπоπоYнллу
9b слоорπмYнлмн
9b слоорπнπмлнYнллсЪ!мYнлмл
9b снноoYнллу
9b мрфсYмффуЪ!мYнллп

{λƎyŜŘY XXXXXXXXXXXXXXϕϕϕ

aNJ tϕ LLJLJl·ă2 π a l·yl·ƎλyƎ 5λNJŜŎǘ2NJ π {Lt óLyŘdzăǘNJλl·f tNJ2ŘdzŎǘăǘ [ǘŘ
5l·ǘŜY нрклнкнлмпϕ

UK - DECLARATION OF CONFORMITY

Declaration of Conformity

We

SIP (Industrial Products) Ltd
Gelders Hall Road
Shepshed
Loughborough
Leicestershire
LE12 9NH
England

As the manufacturer within the UK, England, Scotland & Wales,
declare that the

Fireball 342 Propane Space Heater - SIP Part No. 09287
Fireball 512 Propane Space Heater - SIP Part No. 09288
Fireball 1030 Propane Space Heater - SIP Part No. 09289
Fireball 1706 Propane Space Heater - SIP Part No. 09291

Conforms to the requirements of the following directive(s), as indicated.

Electrical Equipment (Safety) Regulations 2016
Electromagnetic Compatibility Regulations 2016
Gas Appliances (Product Safety and Metrology etc (Amendment etc) (EU Exit) Regulations 2019)
The Restriction of the Use of Certain Hazardous Substances in Electrical and Electronic Equipment Regulations 2012

And the relevant harmonised standard(s), including

EN 55014-1:2006+A1+A2
EN 55014-2:1997+A1+A2
EN 61000-3-2:2006+A1+A2
EN 61000-3-3:2008
EN 60335-1:2012
EN 60335-2-102:2006+A1:2010
EN 62233:2008
EN 1596:1998+A1:2004

Signed: .....

Mr P. Ippaso - Director - SIP (Industrial Products) Ltd
Date: 15/03/2021

UK CA

CONTENTS

Page No.	Description
4.	Safety Symbols Used Throughout This Manual
4.	Safety Instructions
7.	Electrical Connection
8.	Guarantee
9.	Technical Specifications
9.	Contents and Accessories
9.	Assembly Instructions
10.	Getting To Know Your Heater
11.	Operating Conditions
12.	Operating Instructions
14.	Maintenance
15.	Wiring Diagram
16.	Troubleshooting
17.	Exploded Drawing - Fireball 342
18.	Parts List - Fireball 342
19.	Exploded Drawing - Fireball 512
20.	Parts List - Fireball 512
21.	Exploded Drawing - Fireball 1030
22.	Parts List - Fireball 1030
23.	Exploded Drawing - Fireball 1706
24.	Parts List - Fireball 1706
25.	Notes
26 & 27.	UK & EU - Declaration of Conformity

SAFETY SYMBOLS USED THROUGHOUT THIS MANUAL

Danger / Caution: Indicates risk of personal injury and/or the possibility of damage.

Warning: Risk of electrical injury or damage!

Note: Supplementary information.

SAFETY INSTRUCTIONS

READ INSTRUCTIONS BEFORE USE

IMPORTANT: Please read the following instructions carefully, **failure to do so could lead to serious personal injury and / or damage to the heater.**

When using your heater, basic safety precautions should always be followed to reduce the risk of fire, electric shock, personal injury and / or damage to the heater.
Read all these instructions before operating the heater and save this user manual for future reference.
SIP recommends that this heater should **not** be modified or used for any application other than that for which it was designed. If you are unsure of its relative applications do not hesitate to contact us and we will be more than happy to advise you.
The forced air propane heaters are designed to warm areas with adequate ventilation such as workshops, garages and out buildings etc.

Danger: Risk of fire, Burning, Inhalation of poisonous fumes, and explosion hazard; Keep all combustibles such as building materials, paper or cardboard etc. a safe distance away from the heater.
Never use the heater in places which do, or may contain volatile, explosive or flammable airborne, or liquid combustibles such as, but not limited to petrol, solvents, paint thinners, dust particles or other substances likely to be ignited by the heater.

NOTES

PARTS LIST - 09291 FIREBALL 1706

Ref. No.	Description	Sip Part No.
1.	Front grill	PW09-10339
2.	Casing	PW09-10340
3.	Handle	PW09-10341
4.	Chamber	PW09-10342
5.	Chamber bracket	PW09-10343
6.	Terminal block	PW09-10344
7.	Burner assembly	PW09-10345
8.	Thermocouple	PW09-10318
9.	Thermostat	PW09-10346
10.	Electrode	PW09-10336
11.	Fan	PW09-10347
12.	Motor	PW09-10348
13.	Rear grill	PW09-10349
14.	Burner support	PW09-10350
15.	Capacitor 2mf	PW09-10351
16-1.	Gas valve	PW09-10331
16-2.	Solenoid valve	PW09-10332
16-3.	Gas pipe	PW09-10352
16-4.	Gas nozzle	PW09-10353
17.	Mains lead	PW09-10323
18.	Base	PW09-10354
19.	Plastic cover	PW09-10326
20.	Switch	PW09-10329
21.	Piezo ignitor	PW09-10330
22.	Regulator c/w hose	PW09-10325
23.	Bracket	PW09-10335
24.	Electrode	PW09-10336

SAFETY INSTRUCTIONS….cont

KNOW YOUR HEATER: Read and understand the owner's manual and labels affixed to the heater. Learn its applications and limitations, as well as the potential hazards specific to it.
DO NOT USE THE HEATER IN DANGEROUS ENVIRONMENTS: Do not use your heater in damp or wet locations, or expose it to rain. Always provide adequate space around the heater.
DO NOT OPERATE THE HEATER IN EXPLOSIVE ATMOSPHERES: Do not use the heater in the presence of flammable liquids, gases, dust or other combustible sources.
KEEP CHILDREN AND UNTRAINED PERSONNEL AWAY FROM THE WORK AREA: All visitors should be kept at a safe distance from the work area.
STORE THE HEATER SAFELY WHEN IT IS NOT IN USE: The heater should be stored in a dry, locked cupboard, or similar when not in use wherever possible and out of the reach of children.
STAY ALERT: Always watch what you are doing and use common sense. Do not operate the heater when you are tired or under the influence of alcohol or drugs.
DISCONNECT THE HEATER FROM THE MAINS SUPPLY: When not in use, before servicing and when changing gas supply etc.
AVOID UNINTENTIONAL STARTING: Make sure the switch is in the **OFF** position before connecting the heater to the mains supply.
DO NOT ABUSE THE MAINS LEAD: Never carry the heater by the mains lead or pull it to remove the plug from the mains socket. Keep the mains lead away from heat, oil and sharp edges. If the mains lead is damaged, it must be replaced by the manufacturer or its service agent or a similarly qualified person in order to avoid unwanted hazards.
HAVE YOUR HEATER REPAIRED BY A QUALIFIED PERSON: The heater is in accordance with the relevant safety requirements. Repairs should only be carried out by qualified persons using original spare parts, otherwise this may result in considerable danger to the user.

- **DANGER!** Risk of carbon monoxide poisoning; failure to provide proper ventilation could result in serious illness or death.
- Check that the heater is in sound condition and good working order. Take immediate action to repair or replace damaged parts.
- Use recommended parts only - Unapproved parts may be dangerous and will invalidate the warranty.
- Only use propane to fuel your heater, in accordance with instructions contained in this manual.
- **WARNING!** Only use the heater in well ventilated areas. Ensure continuous ventilation from outside of the building is provided to the heater and the operating area.
- Keep the front of the heater a minimum of 3.5m (138”) from any combustible materials (i.e. wooden items, cloth, plastics, paper, etc).
- Only operate on a level and stable surface.
- **WARNING!** Do not use the heater near flammable material, liquids, solids, gases.

SAFETY INSTRUCTIONS….cont

- Do not use the heater in closed rooms, living areas, basements or below ground level.
- Do not allow untrained persons to operate the heater and do not operate the heater without all covers etc. correctly fitted.
- Do not move or handle the heater when it is running or still hot - always turn it off and allow it to cool.
- Do not leave the heater unattended when in use. Switch the heater off and unplug from the mains supply before leaving the work area.
- Do not obstruct the air inlet (rear) and air outlet (front) of the heater.
- Do not use any form of ducting in front or at the rear of the heater.
- Do not allow children or animals near the heater, particularly when in use, or while still hot.
- Never connect the heater to an unregulated gas supply.
- Only use the regulator supplied with the heater, or a direct replacement from SIP.
- Before each use; always check that the hose and regulator are un-damaged, and replace as necessary.
- Always ensure that all fittings are gas tight; check with a solution of soap and water - **NEVER CHECK FOR GAS LEAKS WITH A FLAME!**
- Never direct the heater directly towards a gas cylinder.
- The motor and fan should always be running before attempting to ignite the heater, during operation and at shutdown.
- **WARNING! RISK OF ELECTRIC SHOCK.** Do not expose the heater to water spray, rain, dripping water or moisture of any kind.
- Do not operate the heater when you are tired or under the influence of alcohol, drugs or intoxicating medication.
- Do not touch the heater outlet or chamber when first switched off as these are very hot and will take time to cool.
- Ensure that the heater is correctly turned off when not in use and store in a safe, dry area, out of reach of children.

GENERAL HAZARD WARNING:

Failure to comply with the precautions and instructions provided with your heater can result in serious injury, property damage, fire damage, explosions, carbon monoxide poisoning, electrical shock and death. Only persons who have read and understand the dangers mentioned in this manual should operate or service the heater.

Caution: The warnings and cautions mentioned in this user manual can not cover all possible conditions and situations that may occur. It must be understood by the operator that common sense and caution are factors which cannot be built into this product, but must be applied.

EXPLODED DRAWING - 09291 FIREBALL 1706

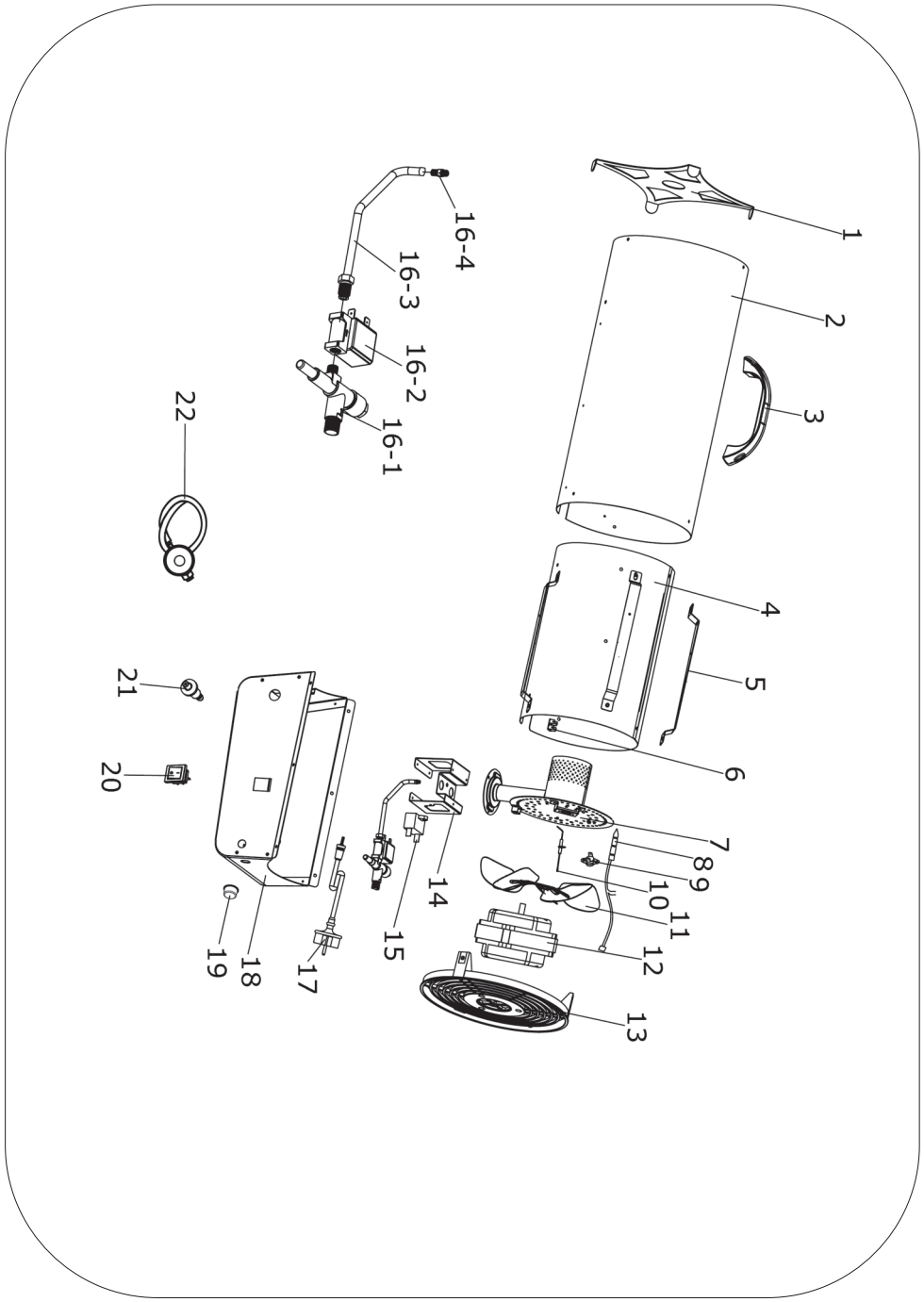

PARTS LIST - 09289 FIREBALL 1030

Ref. No.	Description	Sip Part No.
1.	Front grill	PW09-10339
2.	Casing	PW09-10340
3.	Handle	PW09-10341
4.	Chamber	PW09-10342
5.	Chamber bracket	PW09-10343
6.	Terminal block	PW09-10344
7.	Burner assembly	PW09-10345
8.	Thermocouple	PW09-10318
9.	Thermostat	PW09-10346
10.	Electrode	PW09-10336
11.	Fan	PW09-10347
12.	Motor	PW09-10348
13.	Rear grill	PW09-10349
14.	Burner support	PW09-10350
15.	Capacitor 2mf	PW09-10351
16-1.	Gas valve	PW09-10331
16-2.	Solenoid valve	PW09-10332
16-3.	Gas pipe	PW09-10352
16-4.	Gas nozzle	PW09-10353
17.	Mains lead	PW09-10323
18.	Base	PW09-10354
19.	Plastic cover	PW09-10326
20.	Switch	PW09-10329
21.	Piezo ignitor	PW09-10330
22.	Regulator c/w hose	PW09-10325
23.	Bracket	PW09-10335
24.	Electrode	PW09-10336

ELECTRICAL CONNECTION

WARNING! It is the responsibility of the owner and the operator to read, understand and comply with the following:
You must check all electrical products, before use, to ensure that they are safe.
You must inspect power cables, plugs, sockets and any other connectors for wear or damage.
You must ensure that the risk of electric shock is minimised by the installation of appropriate safety devices; A residual current circuit Breaker (RCCB) should be incorporated in the main distribution board. We also recommend that a residual current Device (RCD) is used. It is particularly important to use an RCD with portable products that are plugged into a supply which is not protected by an RCCB. If in any doubt consult a qualified electrician.

This heater is fitted with a standard UK type 230v ~ plug. Before using the heater inspect the cable and plug to ensure that neither are damaged. If any damage is visible have the heater inspected / repaired by a suitably qualified person. If it is necessary to replace the plug a heavy duty impact resistant plug would be preferable.

The wires for the plug are coloured in the following way:

Yellow / green	Earth
Blue	Neutral
Brown	Live

As the colours of the wires may not correspond with the markings in your plug, proceed as follows: The wire which is coloured blue, must be connected to the terminal marked with N or coloured black. The wire which is coloured brown, must be connected to the terminal, which is marked L or coloured red. The wire which is coloured yellow / green should be connected to the terminal which is coloured the same or marked. ⏚

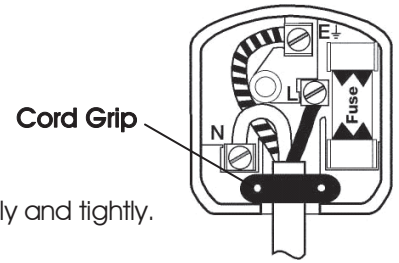

Always secure the wires in the plug terminal carefully and tightly.
Secure the cable in the cord grip carefully.

Warning: Never connect live or neutral wires to the earth terminal of the plug. Only fit an approved plug with the correct rated fuse. If in doubt consult a qualified electrician.

ELECTRICAL CONNECTION….cont

Note: If the heater is used in a place of work all rules and laws etc. relating to the use of portable electrical appliances should be followed.

Note: Always make sure the mains supply is of the correct voltage and the correct fuse protection is used. In the event of replacing the fuse always replace the fuse with the same value as the original.

Note: If an extension lead is required in order to reach the mains supply; ensure that this too is rated for the correct voltage and fuse rating.

Note: The cross section of the extension lead should be checked so that it is of sufficient size so as to reduce the chances of voltage drops.

GUARANTEE

These SIP propane heaters are covered by a 12 month parts and labour warranty covering failure due to manufacturers defects. This does not cover failure due to misuse or operating the heaters outside the scope of this manual - any claims deemed to be outside the scope of the warranty may be subject to charges Including, but not limited to parts, labour and carriage costs.

In the unlikely event of warranty claims, contact your distributor as soon as possible. Proof of purchase will be required before any warranty can be honoured.

Note: Proof of purchase will be required before any warranty can be honoured.

EXPLODED DRAWING - 09289 FIREBALL 1030

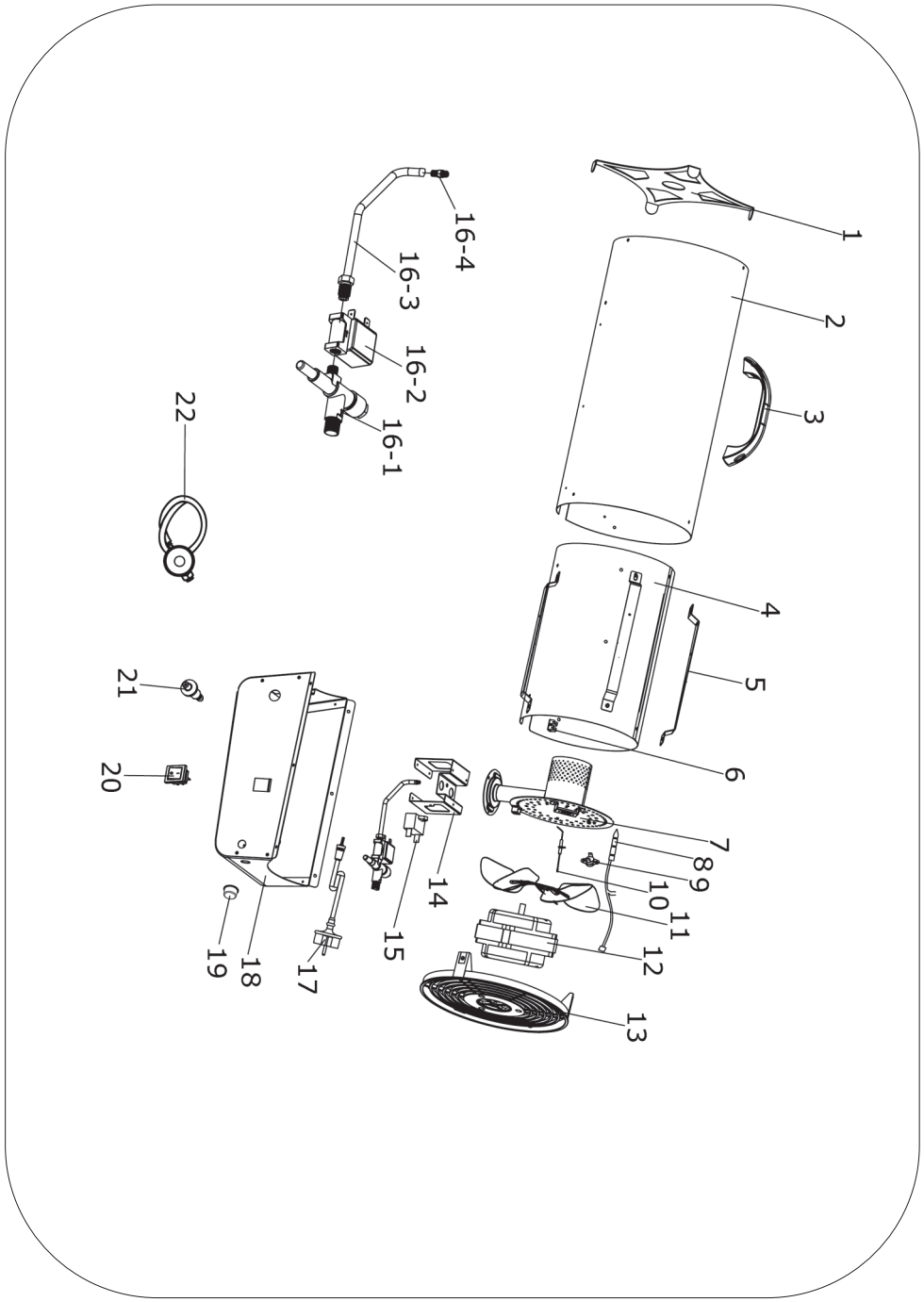

PARTS LIST - 09288 FIREBALL 512

Ref. No.	Description	Sip Part No.
1.	Front grill	PW09-10310
2.	Cover	PW09-10311
3.	Handle	PW09-10312
4.	Terminal block	PW09-10313
5.	Chamber	PW09-10314
6.	Chamber bracket	PW09-10315
7.	Burner assembly	PW09-10316
8.	Thermostat	PW09-10317
9.	Thermocouple	PW09-10318
10.	Fan	PW09-10319
11.	Motor	PW09-10320
12.	Rear grill	PW09-10321
13.	Mounting clip	PW09-10322
14.	Mains lead	PW09-10323
15.	Mains lead gland	PW09-10324
16.	Regulator c/w hose	PW09-10325
17.	Plastic cover	PW09-10326
18.	Base	PW09-10327
19.	Gas valve button	PW09-10328
20.	Switch	PW09-10329
21.	Piezo ignitor	PW09-10330
22-1.	Gas valve	PW09-10331
22-2.	Solenoid valve	PW09-10332
22-3.	Gas pipe	PW09-10333
22-4.	Gas nozzle	PW09-10334
23.	Bracket	PW09-10335
24.	Electrode	PW09-10336

TECHNICAL SPECIFICATIONS

SIP Part No.	09287	09288	09289	09291
Model Name	Fireball 342	Fireball 512	Fireball 1030	Fireball 1706
Electrical Supply	230v~ 50Hz	230v~ 50Hz	230v~ 50Hz	230v~ 50Hz
Fuel	Propane	Propane	Propane	Propane
Heat Output (Kw)	10	15	30	50
Heat Output (BTU)	34121	51182	102364	170607
Approx. Heating Area (m^3)	230	345	690	1145
Approx. Heating Area (cu/ft)	8122	12184	24367	40435
Supply Pressure	0.7 bar	0.7 bar	0.7 bar	1.5 bar
Approx. Fuel Consumption	0.73 Kg/h	1.09 Kg/h	2.18 Kg/h	3.63 Kg/h

CONTENTS AND ACCESSORIES

- Propane Heater.
- Handle inc. 2 x Screws.
- Hose & Regulator assembly.
- Instruction Manual.

ASSEMBLY INSTRUCTIONS

Unpack the heater and check contents; should there be any damaged or missing parts contact your distributor immediately.

- Remove the heater from the carton.
- Remove all of the protective packaging.
- Check the heater for transit damage; check the heater thoroughly for any signs of damage or missing parts.
- Fit the handle to the top of the heater using the supplied screws.

GETTING TO KNOW YOUR HEATER

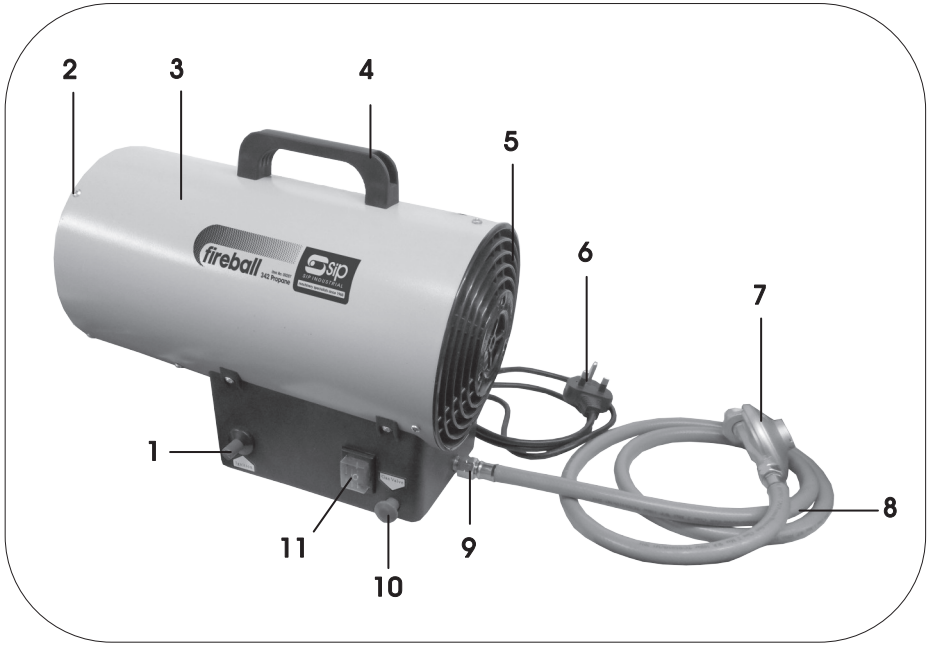

Ref. No.	Description	Ref. No.	Description
1.	Igniter	7.	Gas Regulator
2.	Heat Output	8.	Gas Hose
3.	Cover	9.	Gas Inlet
4.	Handle	10.	Gas Valve
5.	Air Inlet	11.	On/Off Switch
6.	Mains Lead		

EXPLODED DRAWING - 09288 FIREBALL 512

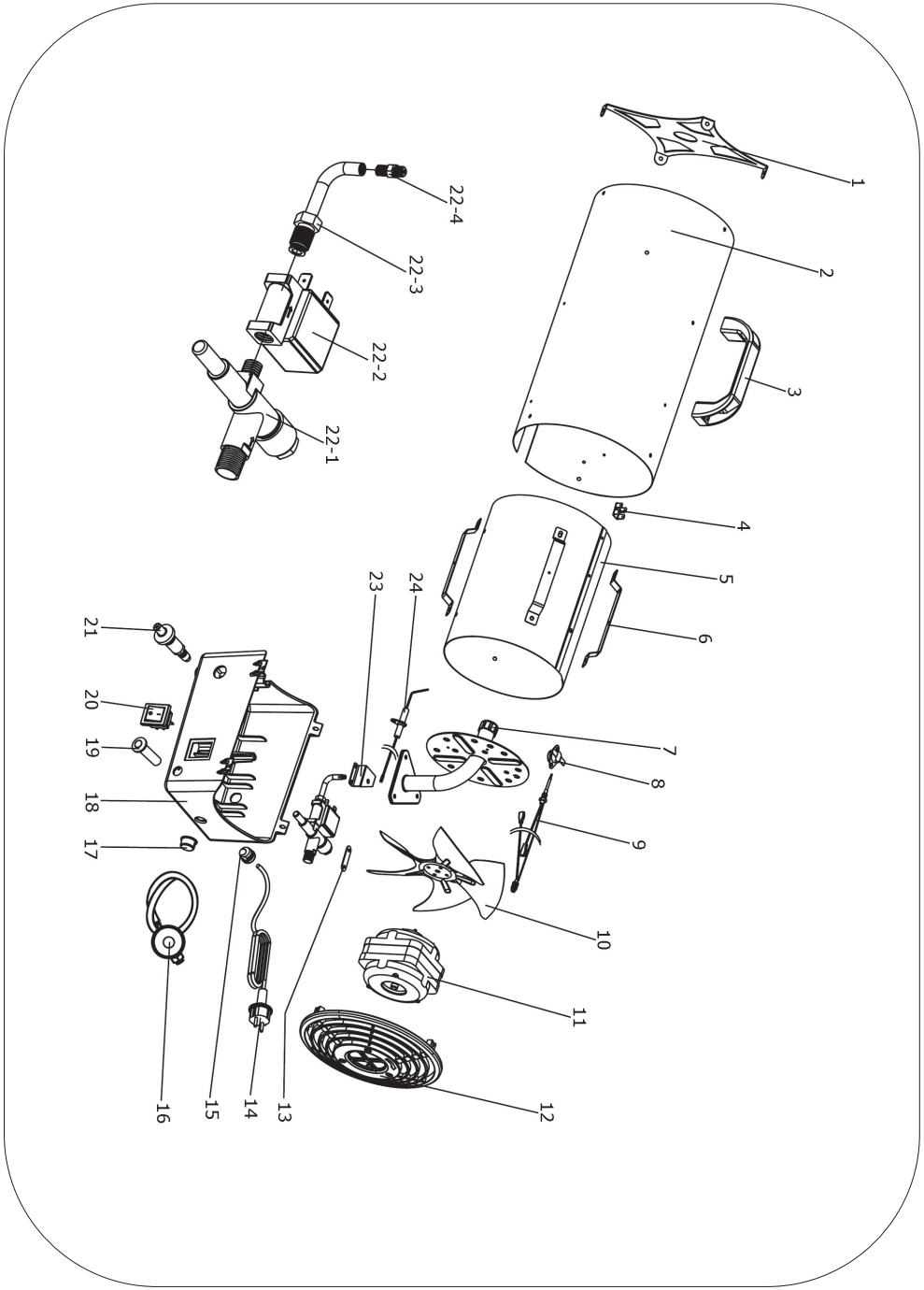

PARTS LIST - 09287 FIREBALL 342

Ref. No.	Description	Sip Part No.
1.	Front grill	PW09-10310
2.	Cover	PW09-10311
3.	Handle	PW09-10312
4.	Terminal block	PW09-10313
5.	Chamber	PW09-10314
6.	Chamber bracket	PW09-10315
7.	Burner assembly	PW09-10316
8.	Thermostat	PW09-10317
9.	Thermocouple	PW09-10318
10.	Fan	PW09-10319
11.	Motor	PW09-10320
12.	Rear grill	PW09-10321
13.	Mounting clip	PW09-10322
14.	Mains lead	PW09-10323
15.	Mains lead gland	PW09-10324
16.	Regulator c/w hose	PW09-10325
17.	Plastic cover	PW09-10326
18.	Base	PW09-10327
19.	Gas valve button	PW09-10328
20.	Switch	PW09-10329
21.	Piezo ignitor	PW09-10330
22-1.	Gas valve	PW09-10331
22-2.	Solenoid valve	PW09-10332
22-3.	Gas pipe	PW09-10333
22-4.	Gas nozzle	PW09-10334
23.	Bracket	PW09-10335
24.	Electrode	PW09-10336

OPERATING CONDITIONS

This is a direct-fired forced-air propane heater for either indoor or outdoor use. It's intended use is primarily the temporary heating of buildings under construction, alteration or repair, but is equally at home in any well ventilated area. All products of combustion generated by the heater are forced through the heater and released into the area being heated. This heater operates at approximately 98% + combustion efficiency but still produces a small amount of carbon monoxide. Humans can tolerate small amounts of carbon monoxide for short periods. Carbon monoxide can build up in a heated space and failure to provide adequate ventilation could result in poisoning or death.

WARNING: Not suitable for use with ductwork.

PRODUCT FEATURES:

- Portable & Stable.
- Wind Resistant.
- Has a Safety Shut-off System.

Warning: The Propane pressure regulator and hose assembly supplied with this heater must be used without alteration.

The assembly should be visually inspected prior to each use. If the is evidence of any wear or damage to the hose or the regulator, it should be directly replaced from SIP, or one of it's agents prior to the heater being operated.

- The heaters mentioned in this manual should only be used outdoors, or in well ventilated surroundings.
- A general rule would be that for every Kw of output there should be permanent ventilation of 25 cm^2 with a minimum outlet / inlet of 250 cm^2.
- Gas cylinders should be kept and used in accordance with current local regulations.
- Never direct the hot air flow from the heater towards the cylinder.
- Never use the heater without all of the covers / guards fitted.
- Always place the heater so that the inlet and outlet are not obstructed.
- If the heater has to work for long periods of time, particularly at full capacity; it is possible that ice will form on the propane cylinder. This is due to high vapour withdrawal - Not for this reason, or for any reason should the cylinder be heated. To avoid this effect, or at least to reduce it; use a larger cylinder, or link 2 or more together (see picture on page 12).

Note: Less gas is vaporized at lower temperatures; you may need two or more cylinders or one large cylinder per heater in colder weather. Your local propane dealer should be able to advise you on this matter.

OPERATING CONDITIONS….cont

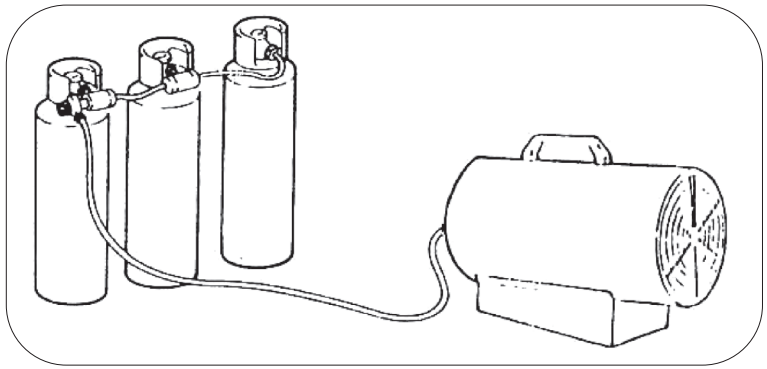

OPERATING INSTRUCTIONS

MINIMUM CLEARANCE AROUND THE HEATER

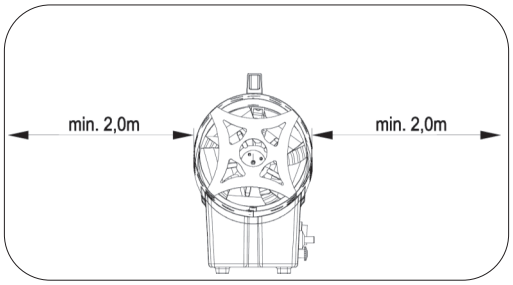

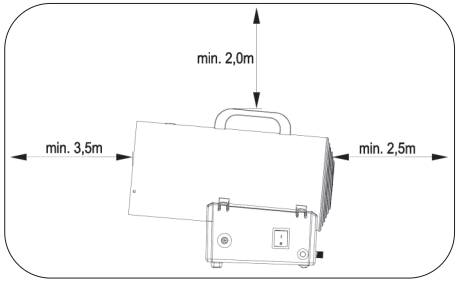

CONNECTING THE HEATER TO THE GAS (PROPANE) SUPPLY

Note: If the heater is used in a place of work all rules and laws etc. relating to the use of portable electrical appliances should be followed.

Caution: Only use the regulator supplied with the heater.

Note: All fittings use left handed threads; Turn anti-clockwise to tighten and clockwise to loosen.

EXPLODED DRAWING - 09287 FIREBALL 342

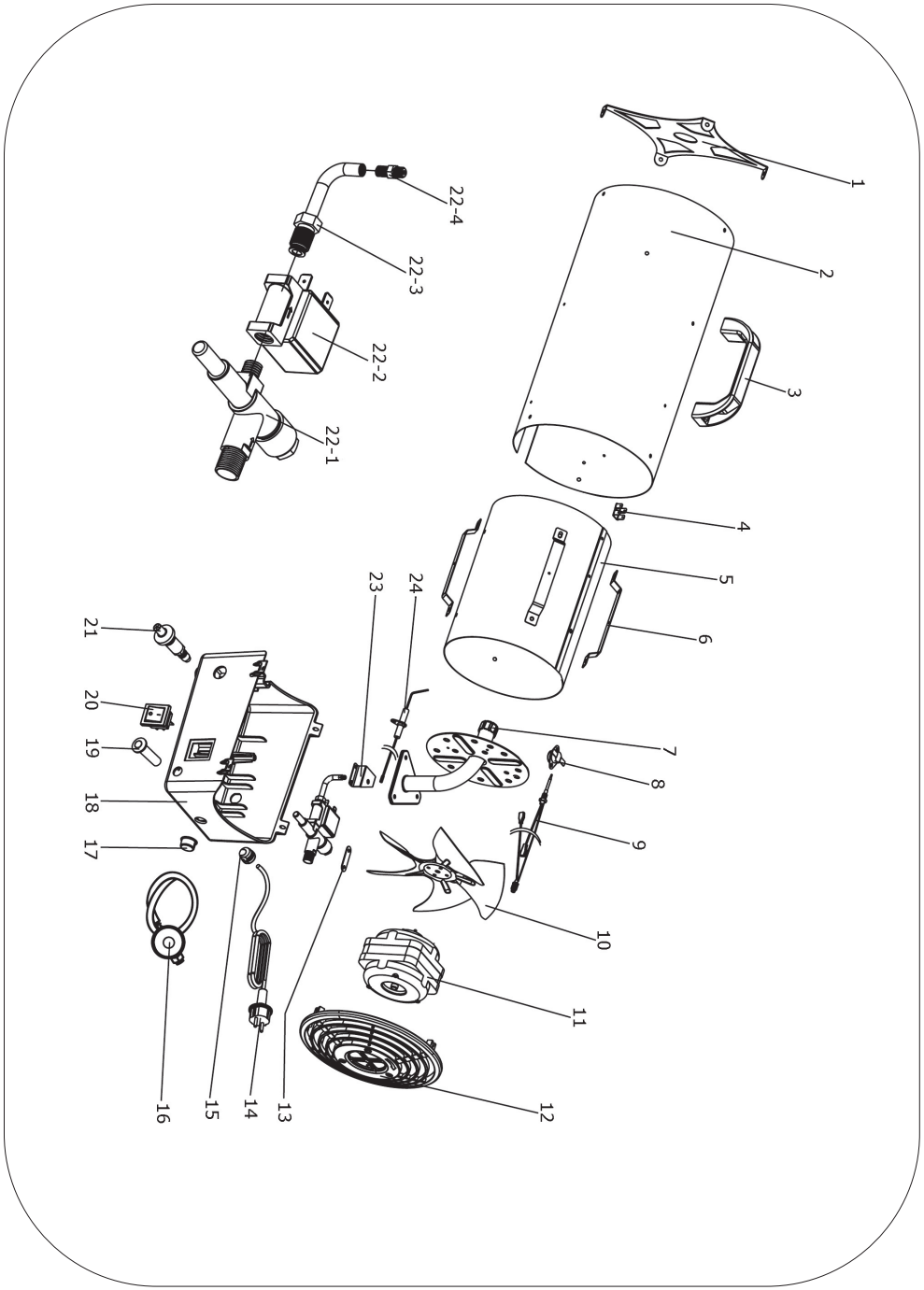

TROUBLESHOOTING

Problem	Possible Cause	Solution
Fan does not turn when electrical connection is made.	• No electrical power to heater. • Fan blade contacting inside of heater housing. • Fan blade (s) bent. • Fan motor defective.	• Check current from electrical outlet; if correct, check the mains lead and extension leads for damage, inc. fuse in plug. • Ensure that the housing is not damaged and that the fan can turn freely. • Straighten blades ensuring that the fan stays as balanced as possible • Check and replace motor as necessary
Heater will not fire up.	• No spark at igniter. • Improper spark gap. • Defective electrode. • No gas at burner.	• Check igniter wire; re-attach or tighten if loose. • Reset the spark gap. • Check and replace electrode as necessary. • Check the gas valve / solenoid valve and replace where necessary.
Heater stops burning during operation.	• Internal temperature too high causing the thermostat to shut the heater down. • Damaged / defective control valve. • Dust or debris build up inside heater.	• Move heater away from obstructions. If still not working check and replace thermostat as necessary. • Check and replace as necessary. • Clean inside of heater.

OPERATING INSTRUCTIONS….cont

IMPORTANT: You must use a propane gas supply cylinder that is compatible with the fitting on the regulator provided with your heater.

Connect the gas pipe to the heater, the gas regulator to a suitable gas cylinder & the opposite end of the pipe to the gas regulator; Secure using an appropriate spanner / wrench.

Ensure all connections are secure and leak free; Apply a 50/50 solution of liquid soap and water to gas joints - bubbles forming show a leak that must be corrected.

Note: Position the gas cylinder / heater so that the hose leaving the regulator has no kinks or bends.

TO START THE HEATER

- Connect the heater to a suitable 230v power supply.
- Turn the main On/Off switch to the on "I" position; the fan should start running if connected correctly.
- Turn on the gas supply.
- Press and hold the gas valve on the heater whilst simultaneously & repeatedly (if necessary) pressing the ignition switch until the heater ignites.
- Continue to hold the gas valve for at least 20 seconds.
- Release the gas valve and the heater should continue to run.

TO STOP THE HEATER

- Turn off the gas supply.
- Continue to run the heater for around 30 seconds to allow the components to cool.
- Press the main switch to the off "0" position

MAINTENANCE

Caution: The heater should be cold, turned off and removed from the mains supply before any alteration and / or maintenance operations are performed.

Caution: Any repairs or maintenance should only be carried out by a suitable qualified person.

- The heater should be checked at least once a year even when abnormal operation is not apparent.
- Check all connections are leak free before each operation.
- Check the condition of the gas hose and regulator before each use and replace as necessary.
- Check the condition of the mains lead and plug before each use and replace as necessary.
- Always check for obvious signs of damage before each use. Replace any damaged items as necessary.
- Check that the fan moves freely before each use.
- It is advisable for a suitably qualified person to check the heater if it has been in storage, or has not been used for an extended period.
- Periodically check the ignition electrode gap and adjust as necessary.
- Periodically check the connections to the safety thermostat and the thermocouple - they must always be clean.
- When necessary; clean the fan and the inside of the heater with low pressure compressed air - a dust mask and safety glasses should be worn during this operation.
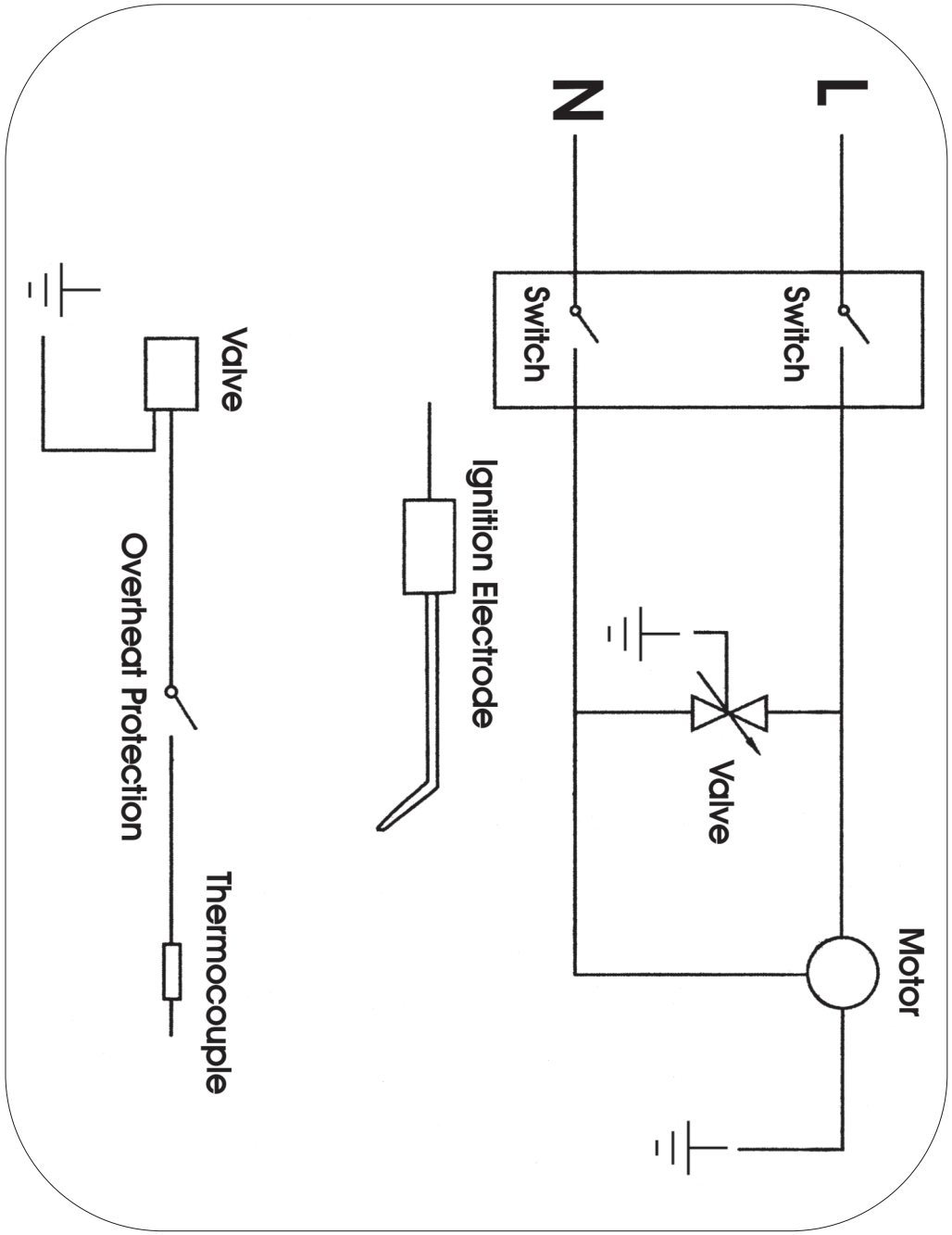
WIRING DIAGRAM