User Instructions

PROFESSIONAL FOAM GUN

SKU: AB385

PACK CONTENTS

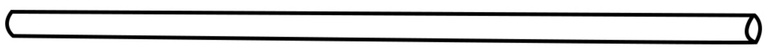

Extension Tube x 2

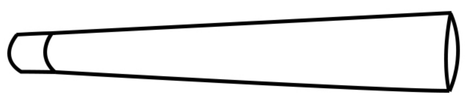

Nozzle x 2

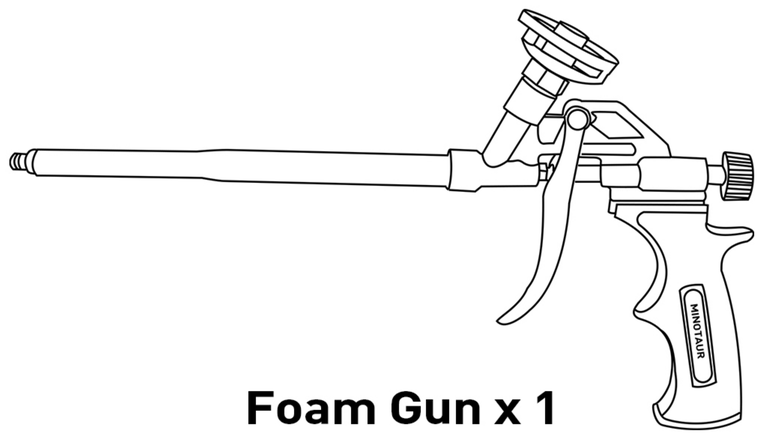

Foam Gun x 1

PLEASE KEEP THESE INSTRUCTIONS FOR FURTHER REFERENCE

SPECIFICATION

Pack: 1 Set

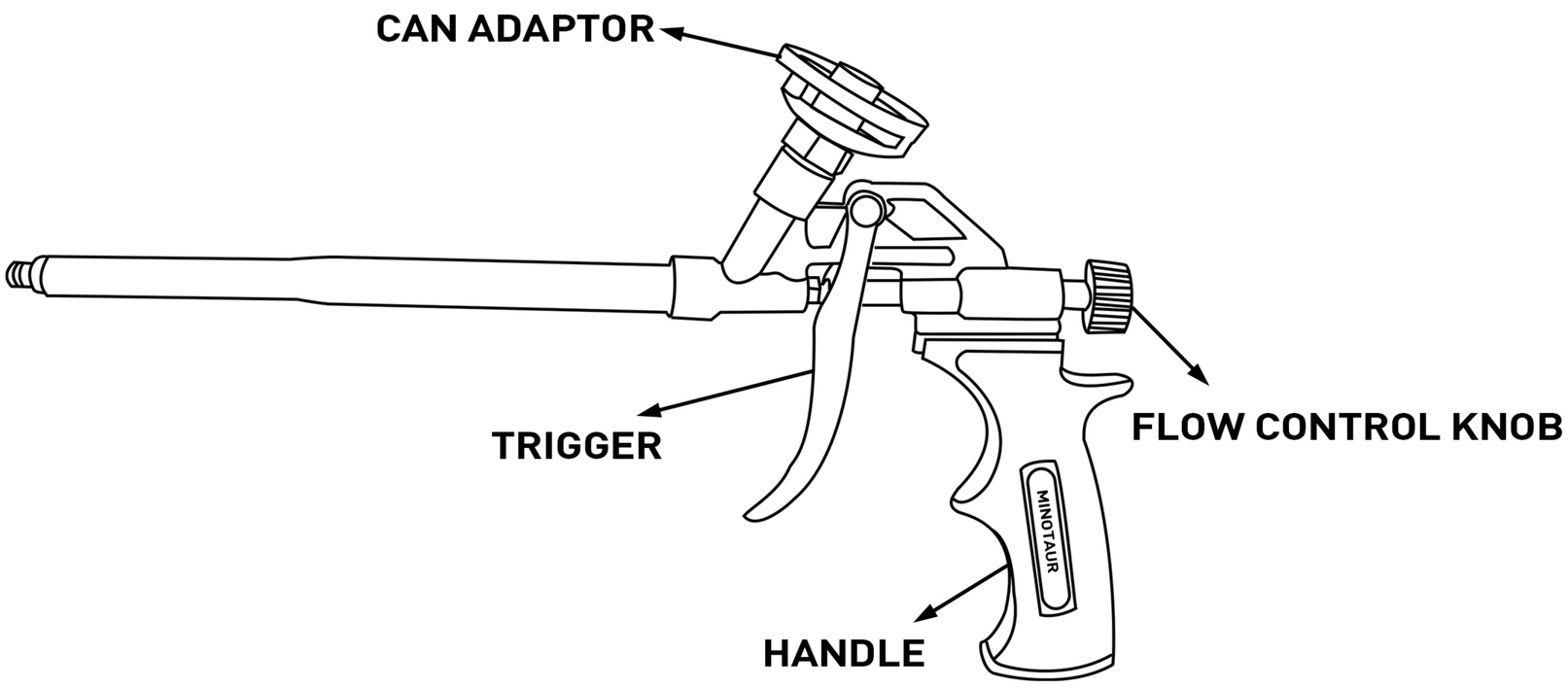

HEALTH AND SAFETY

DANGER:

- Do not use in the proximity of any open flames, cigarettes or any other potential cause of combustion.

WARNING:

- Never point the gun at humans or animals and do not discharge unless in use.
- Always wear personal protection equipment: gloves, goggles for eye protection, a mask with the appropriate activated carbon filters when working with the foam gun.

CAUTION:

- Keep the gun out of the reach of children.
- The sealant and adhesive products are very sticky and will adhere to most surfaces and skin. Avoid getting foam on skin.
- Always read the foam manufacturer's instructions when handling and using their product in conjunction with this gun.

ASSEMBLY AND USE

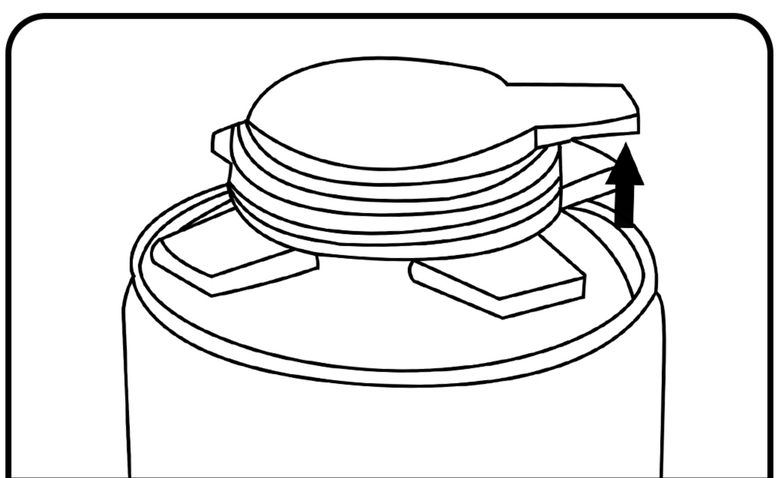

1 REMOVE THE CAP OF INSULATION FOAM CAN

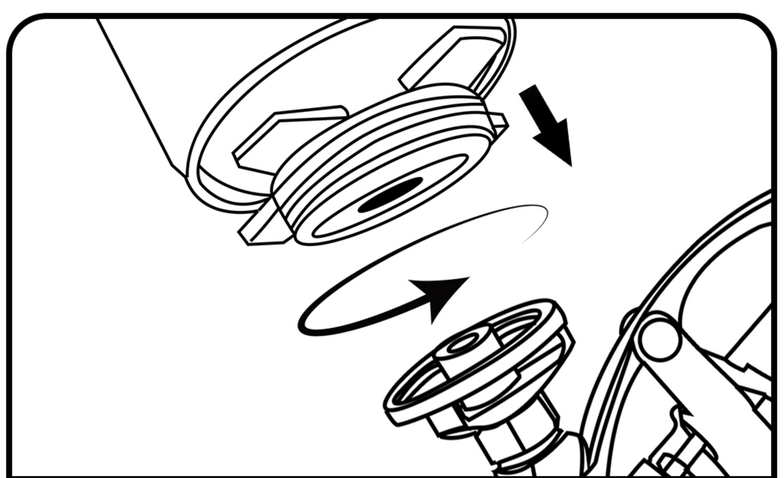

2 SCREW THE CAN ONTO THE GUN ADAPTER

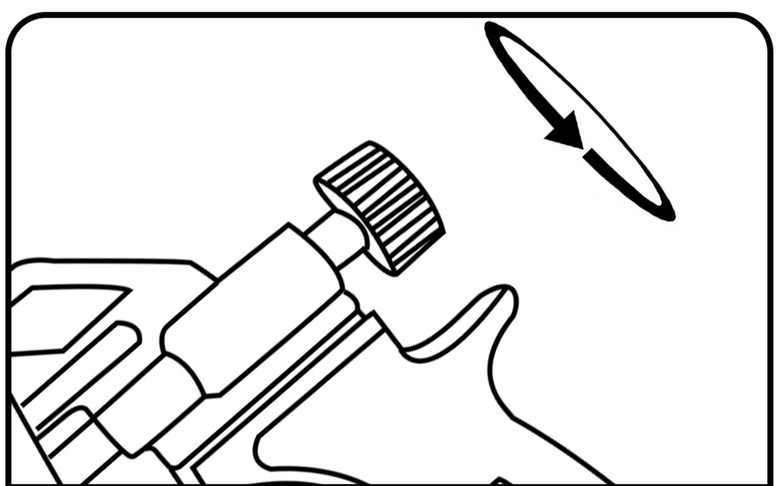

3 SLIGHTLY LOOSEN THE FLOW CONTROL KNOB VALVE

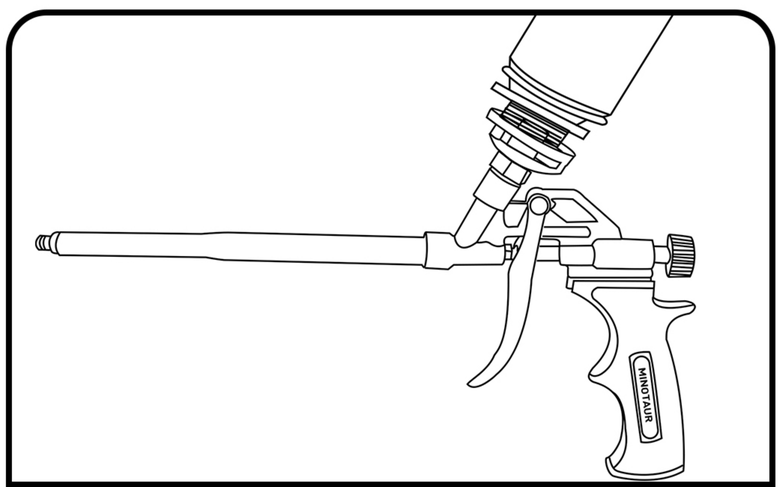

4 PULL TRIGGER TO SPRAY THE FOAM

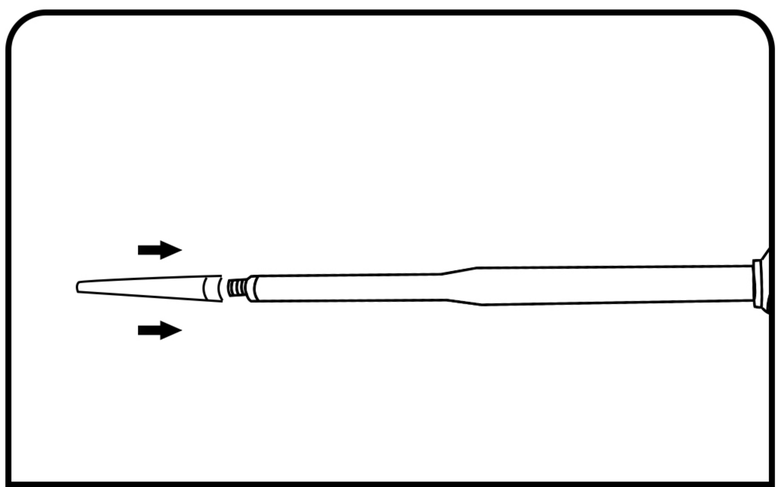

5 PUT ON THE NOZZLE IF NEEDED

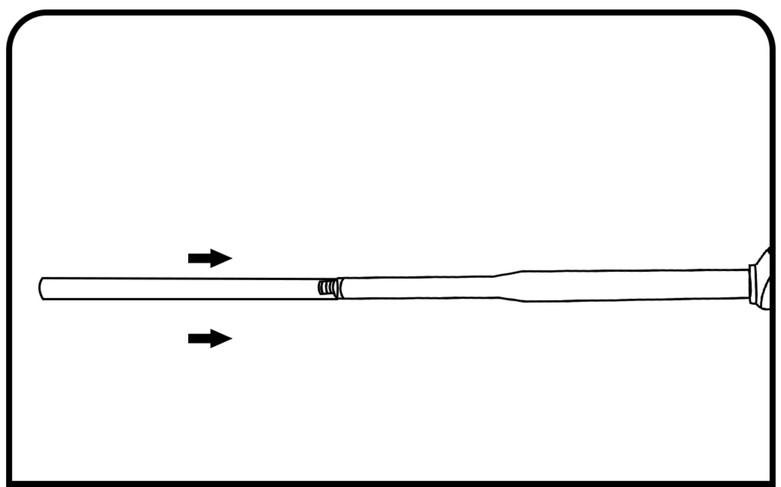

6 PUT ON THE EXTENSION TUBE IF NEEDED

CARE AND CLEANING

- If the gun is not to be reloaded it must be cleaned as soon as possible after the cartridge has been removed to avoid hardening of the foam inside the gun.
- Always ensure all foam is released from the gun before cleaning. Please dispense contents into a covered container lined with a disposable bag, e.g., a trash can with a lid, and dispose per local regulations.
- To clean the foam dispensing gun, attach a cartridge of professional cleaner, making sure the threads are straight.
- Leave the cleaner in the gun for about two minutes. Release the cleaner by pressing the trigger and repeat this process until the cleaner runs clear and shows no trace of foam out of the gun.
- Dispense cleaner until there are no signs of residual foam. This usually requires about half a can of gun cleaner. When detaching the cleaner, continue to pull trigger while unscrewing the cleaner from the gun to help prevent spray back.

CUSTOMER SUPPORT

www.toolstation.com/contact

Call us 0808 100 7211

Mobile friendly 0330 333 3303

Email info@toolstation.com

Imported by Toolstation (company number 04372131)

MINOTAUR is a Toolstation brand

Toolstation is a Travis Perkins company