# 3500356

SCAN ME

Please read all instructions carefully before use and retain for future reference.
Veuillez lire attentivement ces instructions avant utilisation et conservez-les pour pouvoir les consulter à l'avenir.
Bitte lesen Sie die Anleitung sorgfältig und bewahren Sie sie als Referenz auf.
Leed todas las instrucciones detenidamente antes de usar y retened para futuras consultas.
Si prega di leggere attentamente tutte le istruzioni prima dell'uso e conservarle per una futura consultazione.

**CAUTION** Do not immerse in water.
**ATTENTION** Ne pas immerger dans l'eau.
**VORSICHT** Nicht in Wasser tauchen.
**PRECAUCIÓN** No sumergid en agua.
**AVVERTENZA** Non immergere nell'acqua.

Wear a dust mask.
Portez un masque anti-poussière.
Tragen Sie eine Staubmaske.
Usad una máscara de polvo.
Indossare una mascherina antipolvere.

Protect your eyes.
Protégez vos yeux.
Schützen Sie Ihre Augen.
Protejed sus ojos.
Proteggere gli occhi.

Protect your ears.
Protégez vos oreilles.
Schützen Sie Ihre Ohren.
Protejed vuestros oídos.
Proteggere le orecchie.

Protect your eyes.
Protégez vos yeux.
Schützen Sie Ihre Augen.
Protejed sus ojos.
Proteggere gli occhi.

Protect your hands.
Protégez vos mains.
Schützen Sie Ihre Hände.
Protejed vuestras manos.
Proteggere le mani.

## EN

Please read and understand these instructions before you use your product. Failure to do this may result in personal injury or damage to the product. This manual should be kept with the product.
The safety precautions and warnings are to ensure your safety and protect you from harm or damage to the product.
The information contained in this manual was accurate at the time of production, however, VonHaus may make modifications to the product without notification.

**WARNING!** You must read these instructions carefully before operating the machine. Make sure that you are familiar with the controls and properly operate the machine. You must learn how to stop the machine quickly.

If you do not follow the warnings and instructions, it may result in fire and/or serious injury. Make sure to save all warnings and instructions for future reference.
Read this manual and labels affixed to the machine to understand its limitations and potential hazards.
Be thoroughly familiar with the controls and their proper operation. Know how to stop the machine and disengage the controls quickly.
If the unit is to be used by someone other than original purchaser, or is to be loaned, rented, or sold, always provide this manual and any needed safety training before operation. The user can prevent and is responsible for accidents or injuries that may occur to themselves, to other people, or to property.
Do not force the machine beyond its limits. Use the correct machine for your application.
Know how to stop the machine quickly in case of emergency. Understand the use of all controls.
ALL MAINTENANCE other than that listed in this manual, should be carried out by professionally trained and certified personnel.
When using this machine for the first time and before actual work, you MUST learn how to handle the machine from an experienced or skilled person.

**PLUGS & CABLES**
Prior to carrying out any maintenance work you MUST identify electrical isolation methods and isolate all electrical supplies.
Prior to use and with all electrical supplies isolated, you MUST check all electrical cables, plugs and connectors for the following -
Are intact and have no signs of damage, to include but not limited to bare wires, chaffing, cuts and loose wiring.
If there are any signs of damage, the damaged item **MUST** be taken out of service until the damage has been repaired by an electrically competent person.
All trailing cables should be routed so as not to cause any kind of trip hazard.
**NEVER** work on or near electricity with wet hands, wet clothing and wet gloves.
Power tools plug must match the outlet. Never modify the plug in any way.
**DO NOT** use any adapter plugs with earthed (grounded) power tools. Unmodified plugs and matching outlets will reduce risk of electric shock.
**DO NOT** expose this power tool to rain or wet conditions. Water entering a power tool will increase the risk of electric shock. **DO NOT** abuse the power cord. Never use the cord for carrying, pulling or unplugging the power tool. Keep the cord away from heat, oil and sharp edges or moving parts. Damaged or entangled cords increase the risk of electric shock. When operating a power tool, use an extension cord suitable for outdoor use. Use of a cord suitable for outdoor use reduces the risk of electric shock.
**IMPORTANT:** Make sure that the electric circuit is fused, and that the power, voltage and frequency of the motor is supported by your mains supply. Also, make sure that your power supply is earthed. Connect your machine to earth.
Never open the ON/OFF switch-box. However, if it should become necessary to do so, contact a qualified electrician. Make sure that you will never touch live contacts, specifically when you plug or unplug your machine. This machine and its power cord must never get into contact with water.
Avoid body contact with earthed or grounded surfaces such as pipes, radiators, ranges and refrigerators. There is an increased risk of electric shock if your body is earthed or grounded.
To prevent electric shock, use only with an extension cord suitable for outdoor use. For additional protection, the installation of a residual current device (RCD) having a rated residual operating current not exceeding 30mA is advisable.
Before use, check that the extension cord is in good condition. When using an extension cord, make sure to use one heavy enough to carry the current your product will draw. An undersized cord will cause a drop in line voltage resulting in loss of power and overheating.
**DO NOT** allow any part of the machine to make contact with water while it is in operation. If the appliance becomes wet while turned off, wipe dry before starting.
**DO NOT** touch the appliance or its plug with wet hands or while standing in water. Wearing rubber boots offers some protection.
Before use, check the supply and extension cord for signs of damage or aging. If the cord becomes damaged during use, disconnect the cord from the supply immediately. If the supply cord is damaged, it must be replaced by the manufacturer or a qualified person in order to avoid a hazard.

**INTENDED USE**
**WARNING!** Never allow children or people unfamiliar with these instructions to use the product. Local regulations can restrict the minimum age of the operator.
Keep children, pets, and other people not using the unit away from the work area (at least 15m). Be alert and shut off the unit if anyone enters work area. Keep children under the watchful care of a responsible adult.
Stay alert, watch what you are doing and use common sense when operating the machine. Never operate the machine when unwell or tired, or if you have taken alcohol, medicine, drugs or any substances which may slow your reflexes and compromise judgment. A moment of inattention while operating the machine may result in serious personal injury.
Appropriate Personal Protective Equipment (PPE), MUST be worn at all times when operating or repairing the machine. The rotating brushes can throw foreign objects into your eyes and cause permanent eye damage. Always wear safety goggles (not glasses) that comply with ANSI safety standard Z87.1. Every day glasses have only impact resistant lenses.
The operating noise of the Grass Sweeper can damage your hearing. When wearing protection such as earplugs or ear defenders to protect your hearing. Long-term and regular users are advised to have hearing checked regularly. Be especially vigilant and cautious when wearing ear protection because your ability to hear alarm warnings will be reduced.
Noise emissions for this equipment is unavoidable. Carry out noisy work at approved times and for certain periods. Limit the working time to a minimum. For your personal protection and protection of people working nearby it is also advisable for them to wear hearing protection.
Protective equipment such as dust mask, non-skid safety shoes, hard hat, or hearing protection used for appropriate conditions will reduce personal injuries.
Always wear anti-slip and resistant work footwear and long trousers while using the machine. Do not use the machine when barefoot, wearing sandals or similar lightweight footwear.
Do not wear chains, bracelets or clothing that is loose fitting or hanging ties or cords. Tie long hair back. Always wear protective earplugs. Loose clothes, jewellery, or long hair can be caught in moving parts. Protect eyes, face, and head from objects that may be thrown from the unit. Always wear safety goggles or safety glasses with side shields when operating.
Always keep hands and feet away from all moving parts during operation. Moving parts can cut or crush body parts. Always keep hands and feet away from all pinch points.
Do not touch parts that might be hot from operation. Allow parts to cool before attempting to maintain, adjust, or service.
Do not overreach. Keep proper footing and balance at all times. This enables better control of the machine in unexpected situations. Extending your body too far can result in a loss of balance and you may fall which will result in injury.
Never place any part of your body where it would be in danger if movement should occur during assembly,

installation, and operation, maintenance, repairing or moving.
Keep in mind that the operator or user is responsible for accidents, hazards or unexpected events involving the machine that occur to other people or their property. It is the responsibility of the user to assess the potential risk of the area where work is being carried out. The operator or user must take all necessary precautions to ensure their own safety and that of others, especially on slopes or rough, slippery and unstable ground.
This machine was designed and manufactured for brushing artificial grass, renewing flattened and matted artificial grass; separating the fibres. It also sweeps garden debris such as leafs and small twigs.

**INSPECTING THE GRASS SWEEPER**
Check your machine before starting it. Keep guards in place and in working order. Make sure all nuts, bolts, etc., are securely tightened.
You must check the general condition of the machine before use.
Never operate the machine when it is in need of repair or is in poor mechanical condition. Replace damaged, missing, or failed parts before using it. Check for fuel leaks. Keep the machine in safe working condition.
Do not use the machine if the machine's switch does not turn off the machine when running. Any machine that can't be controlled with the switch is dangerous and must be replaced.
Regularly check to see that keys and adjusting wrenches are removed from the machine area before starting it. A wrench or a key that is left attached to a rotating part of the machine may result in personal injury.
If the machine should start to vibrate abnormally, stop the machine and check immediately for the cause. Vibration is generally a warning sign of trouble.
Avoid accidental starting. Be sure the switch is off before transporting the machine or performing any maintenance or service on the unit. Transporting or performing maintenance or service on a machine with its switch on invites accidents.
Do not tamper with or disable safety systems.
Only use manufacturer-recommended attachments.
Before using, always visually inspect to see that the tools are not worn out or damaged. Replace worn out or damaged elements and bolts in set to preserve balance.
Keep the machine in good operating condition. Operating the machine in poor or questionable condition could result in serious injury.
Be sure all safety devices are in working order and warning labels are in place. These items are installed for your safety.

**WORK AREA SAFETY**
You must only work in daylight or with good artificial light in good visibility conditions. Do not work at night, at times of heavy fog, or at any other times when your field of vision might be limited and it would be difficult to gain a clear view of the area.
Keep people, children and animals away from the working area.
Operate on flat, level ground.
**DO NOT** work on wet ground. If there has been heavy rain on the working site, wait until the ground has dried up. You will achieve better results on a dry lawn.
Never park the machine in a place with unstable ground which could give way.
You must be careful near ravines, ditches or embankments.
Exercise extreme caution when operating on or crossing gravel drives, walks, or roads. Stay alert for hidden hazards or traffic.
Do not work in the rain, when there is a thunderstorm or lightning risk, at times of strong or gale force winds, or at any other times when the weather conditions might make it unsafe to use this product. If there is bad weather conditions, do not use the machine.
Make sure you thoroughly inspect the entire work area and remove all objects and anything that could be thrown by the machine or could damage the machine (branches, stones, wire, toys, etc).
Attempting to clear the work area whilst using the machine will reduce your concentration and creates a trip hazard. .
Find and locate all fixed objects in the ground, such as sprinkler systems, poles, water valves, bases for washing lines etc. Make sure that you check for hidden electrical cables or similar on the surface of the lawn.
ALWAYS run the machine around these objects.
**NEVER** run the machine over foreign objects.
**DO NOT** operate power tools in explosive atmospheres, such as in the presence of flammable liquids, gases or dust. Power tools may create sparks, which may ignite the dust or fumes.
This machine is only for outdoor use.

**RISK OF PERSONAL INJURY**
Stay alert, watch what you are doing and use common sense when operating a power machine.
Take extra care when starting the Sweeper as the brushes cause the machine to pull.
Before starting the tool, make sure the wheels are not touching any object and are free to move.
Grip the Push Bar firmly with both hands. Never operate with one hand.
Walk, never run with the machine.
Do not use the tool for extended periods of time. Use in short periods with rest in between.

**GENERAL USE AND CARE**
Do not force the Grass Sweeper. Do not use if the switch does not turn it on and off.
Any machine that cannot be controlled with the switch is dangerous and must be repaired.
Disconnect the plug from the power source before making any adjustments, changing accessories, or storing power tool/machine tools. Such preventive safety measures reduce the risk of starting the machine accidentally.
Store idle machines out of the reach of children and do not allow persons unfamiliar with the Grass Sweeper or these instructions to operate the machine.

Maintain the Grass Sweeper. Check for misalignment or binding of moving parts, breakage of parts and any other condition that may affect the machines operation. If damaged, have the machine repaired before use
Use the machine accessories in accordance with these instructions, take into account the working conditions and the work to be performed.
Do not use of the machine for operations different from those intended could result in a hazardous situation.

**CLEANING & MAINTENANCE** Never soak or immerse electrical components and or a component that has a plug attached.

Disconnect the plug from the power source before making any adjustments, changing accessories, or storing. Such preventive safety measures reduce the risk of starting the power tool accidentally.
Ensure the motor has fully stopped before cleaning, clearing a blockage, checking, or carrying out any maintenance on the tool.
Maintain your power tool. Check for misalignment or binding of moving parts, breakage of parts and any other condition that may affect the power tool's operation.
If damaged, have the power tool repaired by a qualified repair person before use. Many accidents are caused by poorly maintained power tools.
Keep cutting tools sharp and clean. Properly maintained cutting tools with sharp cutting edges are less likely to bind and are easier to control.
Regularly check external nuts and fixings to ensure vibration caused by normal use has not begun to loosen them.
Store idle machines out of reach of children and do not allow persons unfamiliar with this item or these instructions to operate.
Make sure that the cord is located so that it will not be stepped on, tripped over, or otherwise subjected to damage or stress.
Remove the plug from the mains socket / battery (where applicable) before carrying out any adjustment or maintenance.
Always store the power tool/machine in a dry place.
If the power cord is damaged, it must be replaced by a qualified service technician.
Keep the ventilation slots and motor housing as free of dirt and dust as possible (where applicable).
Clean the Grass Sweeper by rubbing it with a clean cloth and blow it clean using low-pressure compressed air is recommended.

Ensure you have all the pieces listed. If you are missing any components, contact our customer services department at **support@vonhaus.com**
**DO NOT** proceed with assembly if any components are missing.

**TECHNICAL SPECIFICATION**

Rated Voltage 220-240V
Rated Power 1800W
Rated Frequency 50Hz

**DECLARATION OF CONFORMITY**
**CERTIFICAT DE CONFORMITÉ**
**KONFORMITÄTSERKLÄRUNG**
**DECLARACIÓN DE CONFORMIDAD**
**DICHIARAZIONE DI CONFORMITÀ**

We / Nous / Wir / Nosotras / Noi:

**DOMU Brands Ltd**
**Unit 30, Stakehill Industrial Estate, Middleton, Manchester M24 2RW.**
**EU Representative - Authorised Representative Service, 77 Camden Street Lower, Dublin, D02 XE80, Ireland.**

Declare under our sole responsibility the product:
Déclarons, sous notre responsabilité exclusive, que le produit:
Wir erklären unter unserer alleinigen Verantwortung das Produkt:
Declaramos bajo nuestra exclusiva responsabilidad el producto:
Si dichiara sotto nostra eslusiva responsabilità che il prodotto:

SKU
**3500356**

Description / La description / Beschreibung / Descripción / Descrizione

**1800W Arti icial Grass Sweeper**
**Balayeuse de gazon arti iciel 1800W**
**1800W Kunstrasenkehrmaschine**
**Barredora de césped arti icial de 1800W**
**Spazzatrice per erba arti iciale da 1800W**

Complies with the essential requirements of the following directives:
Est conforme aux exigences essentielles des directives suivants:
Erfüllt die grundlegenden Anforderungen der folgenden Richtlinien:
Cumple con los requisitos esenciales de las siguientes directivas:
È conforme ai requisiti fondamentali delle seguenti direttive:

**2006/42/EC**
**2014/30/EU**
**2011/65/EU/mit**
**2015/863/EU**

And the Standards / Et des Normes / Und die Standards / Cumple con los requisitos esenciales de las siguientes directivas / È conforme ai requisiti fondamentali delle seguenti direttive:

**EN 60335-1:2012+A11+A13, EN 62233:2008, EN 50636-2-92:2014, AfPS GS 2014:01, EN 55014-1:2017**
**EN 55014-2:2015, EN IEC 61000-3-2:2019, EN 61000-3-3:2013**

Authorised Signatory on behalf of DOMU Brands Ltd.
Signataire habilité pour le compte de DOMU Brands Ltd.
Prokurist im Namen von DOMU Brands Ltd.
Signatario autorizado en nombre de DOMU Brands Ltd.
Firmatario autorizzato per conto di DOMU Brands Ltd.

## COMPONENTS | COMPOSANTS | KOMPONENTEN | COMPONENTES | COMPONENTI

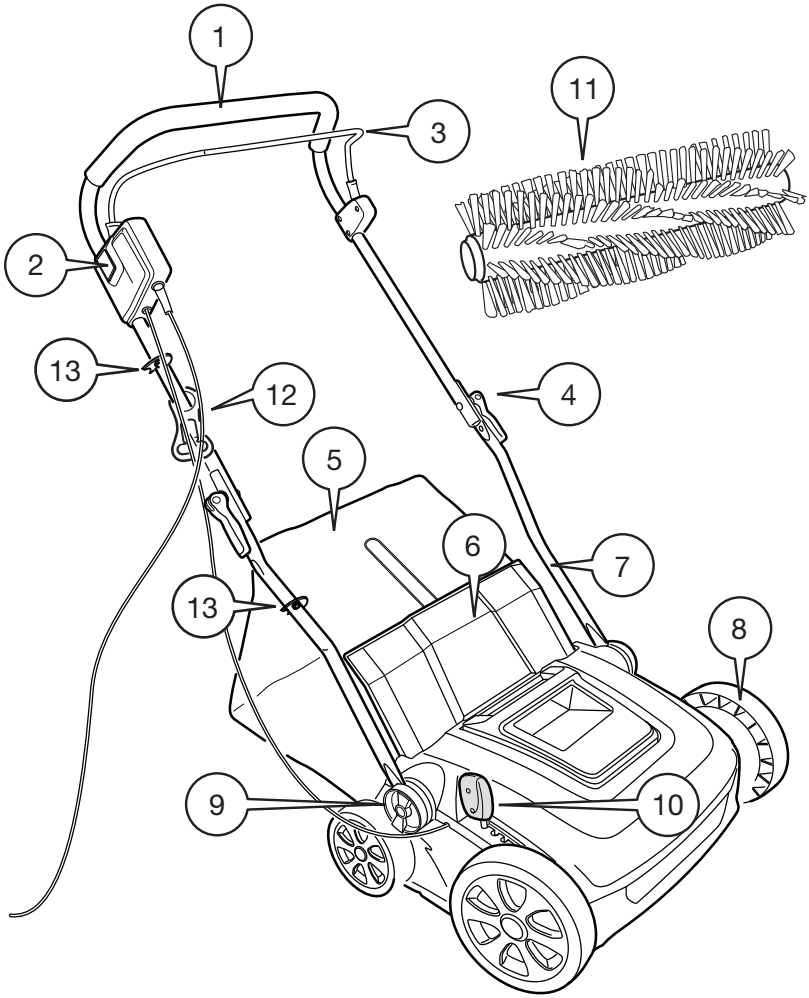


**1**. Handle Bar.
**2**. Safety Button.
**3**. Starting Lever.
**4**. Locking Bolts (2x)
**5**. Debris Basket (frame and mesh)
**6**. Rear Cover.
**7**. Lower Support Bars.
**8**. Wheels.
**9**. Handle Adjustment lock (2x).
**10**. Depth Adjustment Handle.
**11**. Brush Roller (pre installed - **125mmø**)
**12.** Cable Hanging Buckle
**13.** Cable Fixing Buckle 2x

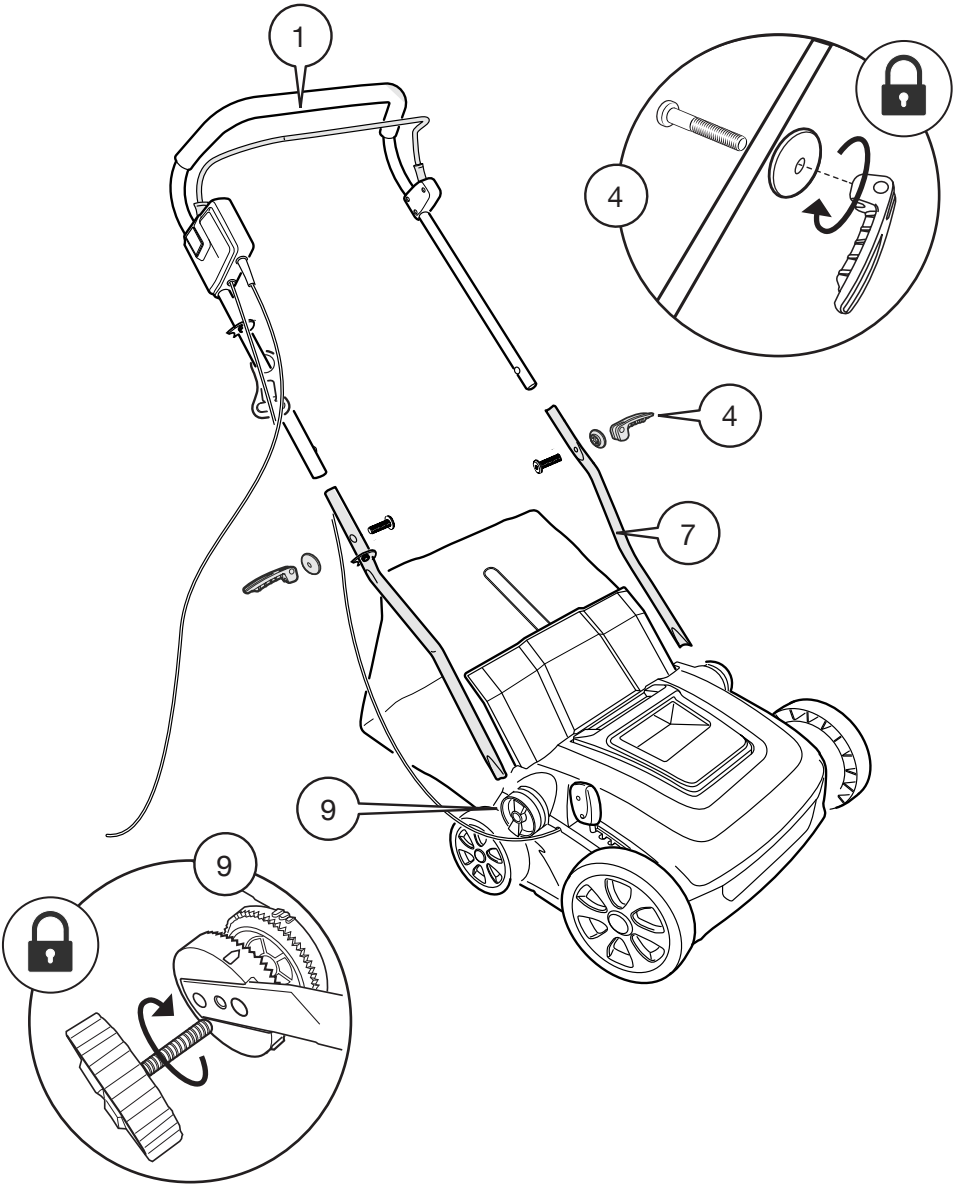




vonhaus

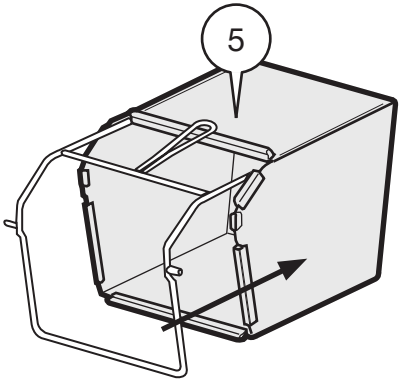


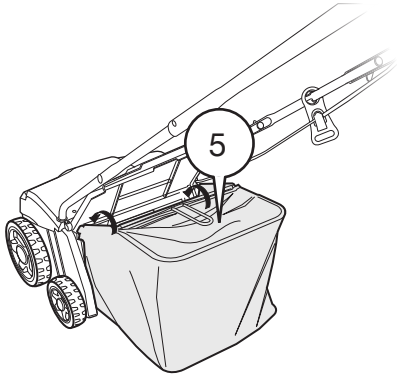


**WORKING POSITION |** POSITION DE TRAVAIL | ARBEITSHALTUNG | POSICIÓN DE TRABAJO | POSIZIONE DI LAVORO

Dust and dirt particles can build up between the grass fibres. If the unit is used on excessively dirty artificial lawns, dust and small particles can be thrown up into the air. It is recommended you clean your lawn using a suitable pressure washer and vacuum before using the Grass Sweeper.

**IMPORTANT!** The lawn **MUST** be dry before using the Lawn Sweeper. Using the Lawn Sweeper on wet lawns will not achieve the same results and will cause dirt/debris to clog up inside the unit.

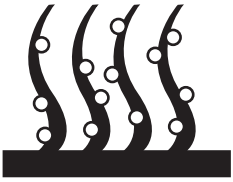

**BEFORE VACUUMING**

**AFTER VACUUMING**

The working depth is adjustable to 5 heights (-11, -7, -3, +3, +10mm). Shift the **Depth Adjustment Handle (10)** forwards or backwards to adjust the height.

**NOTE!** We recommend you start with the highest position first then gradually lower. This will help you get a feel for which setting is best for your grass type.

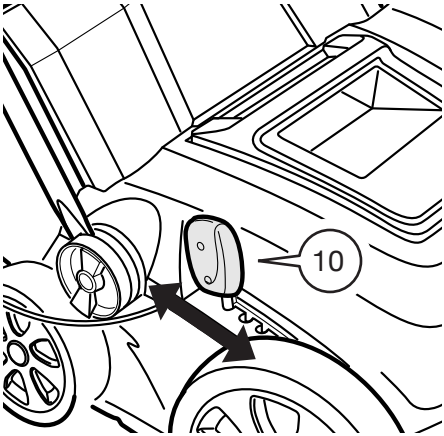


**OPERATION |** OPÉRATION | DIE ANWENDUNG | OPERACIÓN | FUNZIONAMENTO

**BEFORE STARTING**

**1.** Check the condition of the cable, if damaged do not use.

**2.** Ensure that no objects or branches are trapped into the machine.

**3.** Ensure the work area is tidy and free of any obstacles. Remove any large debris such as stones, sticks and even small toys from your lawn/patio to prevent any accidents or damage.

**4.** Never operate the machine if it is damaged in any way.

Once all clear, press and hold the **Safety Button (2)** and pull the **Starting Lever (3)** to turn the unit on.
Keep hold of the Starting Lever and release the Safety Button.

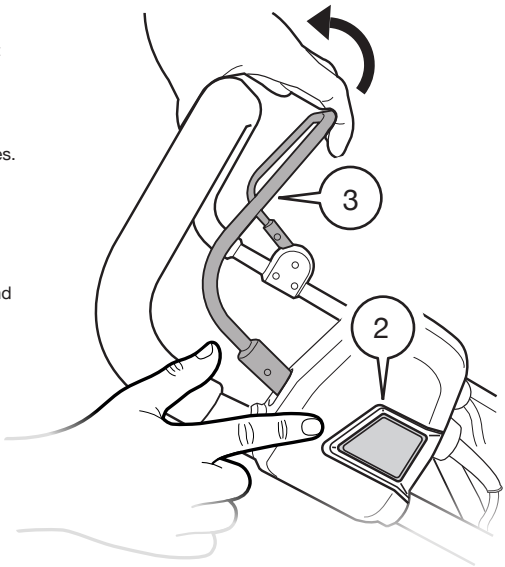

## **WORKING POSITION |** POSITION DE TRAVAIL | ARBEITSHALTUNG | POSICIÓN DE TRABAJO | POSIZIONE DI LAVORO

The Grass Sweeper has an element of self-propelled motion. As the bristles rotate, they will pull the machine along. The lower the setting on the machine, the more intense the self-propulsion will be. We recommend to start off the machine always on the highest setting to familiarise the user with the operations of the machine.

**IMPORTANT!** Ensure you keep a firm grip of the handle/Trigger Switch

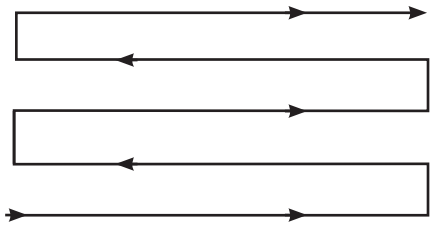

## **WORKING POSITION |** POSITION DE TRAVAIL | ARBEITSHALTUNG | POSICIÓN DE TRABAJO | POSIZIONE DI LAVORO

Start at the area nearest to your power source (mains socket) and work outwards in the pattern above.
Work against the pile of your lawn to achieve a fluffier look.
Never pull the Lawn Sweeper as this will only flatteren the pile of the Grass

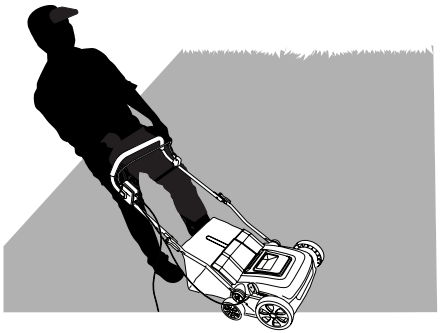

If your lawn has an incline, we recommend working in a horizontal pattern. Due to the heavy pull of the motor, working down hill posses potential risk and injury to you or others.

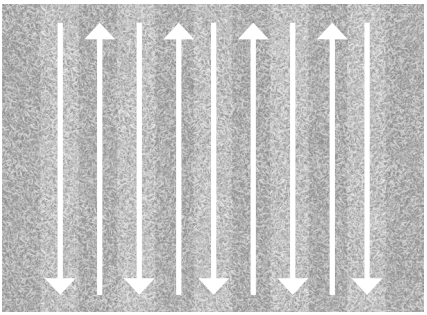

It is possible to add lines to artificial grass as with conventional lawns. When sweeping/ brushing your artificial grass, alternate the direction of the machines path to create lawn stripes.

## **WORKING POSITION |** POSITION DE TRAVAIL | ARBEITSHALTUNG | POSICIÓN DE TRABAJO | POSIZIONE DI LAVORO

The Grass Sweeper, will leave a 10cm gap to walls.
If the turfed area is surround by walls or raised borders, there will be a 10cm border.

It is recommended to use a Strong Bristle Garden brush to aerate the turf in areas the sweeper can't reach.

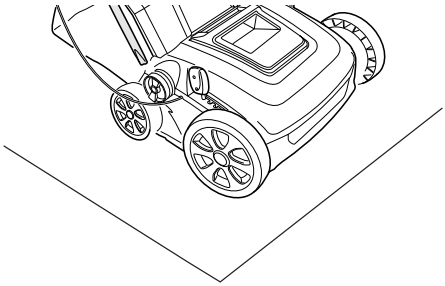

## **MAINTENANCE** | ENTRETIEN | INSTANDHALTUNG | MANTENIMIENTO | MANUTENZIONE

Remove any grass and mud after each use to prevent it from drying. Use a clean cloth to remove dirt and grease.

**DO NOT** use any water on any part of the main machine. Avoid using solvents when cleaning plastic parts. Most plastics are susceptible to damage from various types of commercial solvents and may be damaged by their use. Always ensure that ventilation openings are kept clear of debris.

Taking the Brush Cartridge out will make it easier to clean. Strands of material can become tangled on the cylinder.

Depress on both **Brush Roller Buttons (B)** to remove the Brush.
Over time, the brush will deteriorate depending on how much the product is used, and may require a replacement.
(**116mmø**) Replacement brushes are available.
Please contact **support@domu.co.uk** or visit **www.vonhaus.com** to order online.
Keep the machine stored in a dry, level area away from damp, moisture and rain fall.

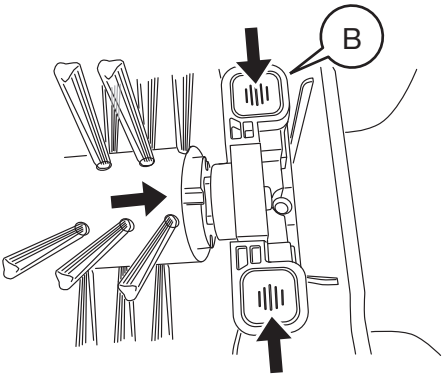


**IMPORTANT!** We recommend you purchase brushes the same size as to what you were supplied with (**125mmø**).

Fitting larger brushes into this model may cause the product to overheat and cut out.

Allow the machine to cool down before storing.

Make sure the machine is clean and dry before storing.
Make sure the machine is stored away from direct sunlight.
Store indoors or in a safe, locked protected area during severe weather and winter months.

Ensure the machine is stored in a position, where any persons cannot step on to attempt to reach items up high, due to risk of movement.

Store the machine out of reach of children or anyone who is not familiar with operation.

**DO NOT** store the machine near an ignition source, such as a wood stove, gas or electric heater, or an appliance or heater with a pilot light.

**DO NOT** stack other items on top of the machine when in storage.

# EN

**DISPOSAL INFORMATION** Please recycle where facilities exist. Check with your local authority for recycling advice.

**CUSTOMER SERVICE** If you are having difficulty using this product and require support, please contact **support@vonhaus.com**

**WARRANTY** To register your product and find out if you qualify for a free extended warranty please go to **www.vonhaus.com/warranty**. Please retain a proof of purchase receipt or statement as proof of the purchase date. The warranty only applies if the product is used solely in the manner indicated in the warnings page of this manual, and all other instructions have been followed accurately. Any abuse of the product or the manner in which it is used will invalidate the warranty. Returned goods will not be accepted unless re-packaged in its original packaging and accompanied by a relevant and completed returns form. This does not affect your statutory rights. No rights are given under this warranty to a person acquiring the appliance second-hand or for commercial or communal use.

**COPYRIGHT** All material in this instruction manual are copyrighted by DOMU Brands.Any unauthorised use may violate worldwide copyright, trademark, and other laws.

# FR

**INFORMATIONS RELATIVES AU RECYCLAGE** Veuillez recycler là où il existe des installations adéquates. Vérifiez auprès de vos autorités locales pour obtenir des conseils sur le recyclage.

**SERVICE CLIENT** Si vous rencontrez des difficultés pour utiliser ce produit et avez besoin d'assistance, veuillez contacter
**support@vonhaus.com**

**GARANTIE** Pour enregistrer votre produit et découvrir si vous vous qualifiez pour une extension gratuite de garantie, rendez-vous sur www.vonhaus.com/warranty. Conservez une preuve d'achat, reçu ou attestation, pour prouver la date de l'achat. La garantie ne s'applique que si le produit a été utilisé de la manière indiquée dans la section de la page des avertissements de ce manuel et que toutes les instructions ont été suivies de manière précise. Tous les abus réalisés sur le produit, dans la manière dont il a été utilisé, rendront la garantie caduque. Les marchandises renvoyées ne seront acceptées que si elles sont remballées dans leur emballage d'origine et accompagnées d'un formulaire de retour adéquat et rempli. Ceci n'affecte pas vos droits statutaires. Cette garantie n'accorde aucun droit à une personne obtenant le produit de seconde main ou à des fins d'utilisation commerciale ou communale.

**DROITS D'AUTEUR** Toutes les informations de ce manuel d'utilisation sont protégées par droit d'auteur par DOMU Brands. Toute utilisation non autorisée pourrait enfreindre les lois mondiales de droit d'auteur, de marque déposée ainsi que d'autres lois.

# DE

**ENTSORGUNG** Bitte entsorgen Sie das Produkt an geeigneten Entsorgungsstellen. Fragen Sie bei Ihrer Gemeinde nach.

**KUNDENSERVICE** Wenn Sie Schwierigkeiten mit diesem Produkt haben und Unterstützung benötigen, wenden Sie sich bitte an
**support@vonhaus.com**

**GARANTIE** Um Ihr Produkt zu registrieren und zu erfahren, ob eine kostenlose verlängerte Garantie möglich ist, gehen Sie bitte auf **www.vonhaus.com/warranty**. Bitte behalten Sie eine Rechnung oder den Kassenzettel als Nachweis des Einkaufdatums auf. Die Garantie gilt nur, wenn das Produkt nur wie in dieser Anleitung beschrieben verwendet wurde und wenn alle Anweisungen befolgt wurden. Jeglicher Missbrauch des Produkts oder der Art und Weise, in der es verwendet wird, macht die Garantie ungültig. Zurückgegebene Artikel werden nur akzeptiert, wenn sie sich in der Originalverpackung befinden und wenn ein relevantes und vollständig ausgefülltes Rücksendeformular enthalten ist. Dies betrifft nicht Ihre gesetzlichen Ansprüche. Für Artikel, die gebraucht erworben wurden, oder die kommerzielle oder gemeinschaftlich genutzt werden, entstehen keinerlei Ansprüche auf Garantie.

**COPYRIGHT** Alle Materialien in dieser Anleitung stehen unter Copyright von DOMU Brands Ltd.Jede unautorisierte Verwendung kann das weltweite Copyright, die Handelsmarke und andere Gesetze verletzen.

# ES

**INFORMACION DE DESECHO** Por favor, reciclad en las instalaciones correspondientes. Consultad con vuestra autoridad local para obtener consejos de reciclaje.

**SERVICIO AL CLIENTE** Si tiene dificultades para utilizar este producto y necesita asistencia, contacte con **support@vonhaus.com**

**GARANTÍA** Para registrar vuestro producto y averiguar si califica para una garantía extendida gratuita, vaya a **www.vonhaus.com/warranty**. Conservad un compro-bante de recibo de compra o extracto como prueba de la fecha de compra. La garantía solo se aplica si el produc-to se utiliza únicamente de la manera indicada en la pá-gina de advertencias de este manual, y todas las demás instrucciones se han seguido con precisión. Cualquier abuso del producto o la manera en que se use invalidará la garantía. Los productos devueltos no se aceptarán a menos que se vuelvan a empaquetar en su embalaje original y acompañados por un formulario de devolución completo y pertinente. Esto no afecta sus derechos le-gales. No se otorgan derechos bajo esta garantía a una persona que adquiere el aparato de segunda mano o para uso comercial o comunitario

**DERECHOS DE AUTOR** Todo el material en este manual de instrucciones está protegido por DOMU Brands. Cualquier uso no autorizado puede violar los derechos de autor, marcas comerciales y otras leyes en todo el mundo.

# IT

**INFORMAZIONI SULLO SMALTIMENTO** Si prega di riciclare nelle apposite strutture. Chiedere una consulenza alle autorità competenti per il riciclo.
**SERVIZIO CLIENTI** Se si riscontrano difficoltà nell'utiliz-zo di questo prodotto e si richiede supporto, contattare **support@vonhaus.com**

**GARANZIA** Per registrare il prodotto e capire se hai dirit-to all'estensione di garanzia, vai su **www.vonhaus.com/warranty**. Si prega di conservare la ricevuta del pagamento quale prova della data d'ac-quisto. La garanzia si applica solo se il prodotto viene utilizzato esclusivamente come indicato nella pagina delle Avvertenze del presente manuale e se tutte le altre informazioni vengano accuratamente seguite. Qualsiasi abuso nell'utilizzo di questo prodotto invaliderà la ga-ranzia. I resi non saranno accettati se non riposti nella confezione originale ed accompagnati da un modulo di reso completo. Ciò non pregiudica i propri diritti obblig-atori. La presente garanzia non attribuisce alcun diritto a coloro che acquistano prodotti di seconda mano o per fini commerciali o condivisi.

**COPYRIGHT** Tutto il materiale contenuto nel presente manuale delle istruzioni è protetto da copyright di DOMU Brands. Qualsiasi uso non autorizzato potrebbe violare il copyright a livello mondiale, marchio ed altre leggi.

# THANK YOU

Thank you for purchasing your product/appliance. Should you require further assistance with your purchase, you can contact us at
**support@vonhaus.com**

VonHaus is a registered trademark of DOMU Brands Ltd. Made in China for DOMU Brands. Unit 30, Stakehill Industrial Estate, Middleton, Manchester M24 2RW.

**EU Authorised Representative:** Authorised Representative Service, 77 Camden Street Lower, Dublin, D02 XE80, Ireland.

# MERCI

Merci d'avoir acheté notre produit/appareil. Si vous aviez besoin d'aide suite à votre achat, vous pouvez nous contacter a
**support@vonhaus.com**

VonHaus est une marque déposée de DOMU Brands Ltd. Fabriqué en Chine pour DOMU Brands. Unit 30, Stakehill Industrial Estate, Middleton, Manchester M24 2RW.

**Représentant autorisé de l'UE:** Service de Représentant Autorisé, 77 Camden Street Lower, Dublin, D02 XE80, Irlande.

# VIELEN DANK

Vielen Dank, dass Sie das Produkt/Gerät gekauft haben. Sollten Sie weitere Unterstützung benötigen, können Sie uns gerne unter (email) kontaktieren
**support@vonhaus.com**

VonHaus ist eine registrierte Handelsmarke von DOMU Brands Ltd. Hergestellt in China für DOMU Brands. Unit 30, Stakehill Industrial Estate, Middleton, Manchester M24 2RW.

**EU-Autorisierter Vertreter:** Bevollmächtigter Vertreterservice, 77 Camden Street Lower, Dublin, D02 XE80, Irland.

# GRACIAS

Gracias por comprar vuestro producto/aparato Si requiere asistencia con vuestra compra, podeis contactarnos a
**support@vonhaus.com**

VonHaus es una marca registrada de DOMU Brands Ltd. Hecha en China para DOMU Brands. Unit 30, Stakehill Industrial Estate, Middleton, Manchester M24 2RW.

**Representante autorizado en la UE:** Servicio de Representante Autorizado, 77 Camden Street Lower, Dublín, D02 XE80, Irlanda.

# GRAZIE

Grazie per aver acquistato il prodotto. Per ulteriore assistenza sul tuo acquisto, puoi contattarci all'indirizzo email
**support@vonhaus.com**

VonHaus è un marchio registrato di DOMU Brands Ltd. Made in Cina per DOMU Brands. Unit 30, Stakehill Industrial Estate, Middleton, Manchester M24 2RW.

**Rappresentante autorizzato dell'UE:** Servizio di Rappresentante Autorizzato, 77 Camden Street Lower, Dublino, D02 XE80, Irlanda.