Original User Instructions

30L Wet & Dry Vacuum Cleaner

With power take off
SKU: AI527

READ BEFORE USE
PLEASE KEEP THESE INSTRUCTIONS FOR FURTHER REFERENCE

PRODUCT SUPPORT

We recommend you keep the original packaging for your product should you need to contact us below.

Should your product develop a fault during warranty, our friendly team are on hand to support you through the process. Follow the steps below:

SCAN ME

STEP 1

Find your proof of purchase and scan this QR code **OR** call our helpline below

STEP 2

Talk to our friendly team about your query and they will provide technical support

STEP 3

If required, our team will send spare parts straight to your home

STEP 4

If replacement spare parts haven't resolved your query, we will issue an RTS reference number

STEP 5

Return the product to your nearest store with RTS reference number given and original receipt, for replacement OR refund

GET IN TOUCH

01904 947568

support@coreservice.co.uk

Helpline: 24/7

Technical support: 9am-5pm, Mon-Fri

wessex electrical

CONTENTS

- WHAT'S IN THE BOX ---------- 3
- TOOLS REQUIRED---------- 4
- SPECIFICATIONS ---------- 4
- EXPLANATIONS AND SYMBOLS, CAUTIONS AND WARNINGS ---------- 5
- IMPORTANT SAFETY WARNINGS ---------- 6
- PRODUCT DESCRIPTION AND IDENTIFICATIONS ---------- 8
- ASSEMBLY AND OPERATING INSTRUCTIONS ----------9
- CARE AND CLEANING ---------- 23
- TROUBLESHOOTING ---------- 24
- DECLARATION OF CONFORMITY / PERFORMANCE ---------- 26
- ENVIRONMENTAL INFORMATION ----------27
- WARRANTY ----------28
- CUSTOMER SUPPORT ---------- 28

WHAT'S IN THE BOX

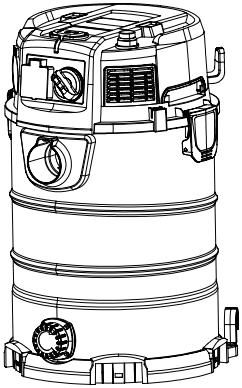

Vacuum assembly

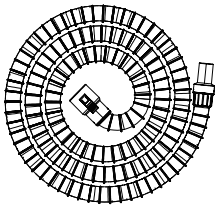

Hose

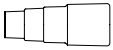

Hose adaptor

Stainless telescopic tube

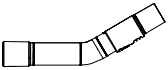

Curved handle

Cartridge filter
(pre-assembled)

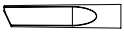

Crevice nozzle

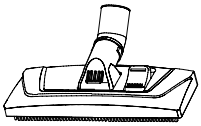

Dual action floor
brush

Caster x 5

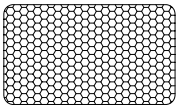

Foam filter
(wet use only)

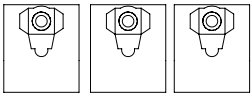

Non-woven dust bag x 3
(dry use only)

Carry handle

Screw x 2

Metal bracket x 2

If you do not have all these items, please contact:
www.coreservice.co.uk
Hotline: +44 01904 947568
Email support@coreservice.co.uk

TOOLS REQUIRED

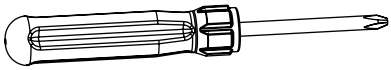

SPECIFICATIONS

- 1500W
- 230-240V~ 50/60Hz
- Max vacuum pressure : 19kPa
- Max air flow : 38L/sec
- Stainless steel tank
- Blower function
- 5.5m power cable
- Power tool take off socket: 1400W max power tool take off function (applicable to circular saw, drill, sanding machine, etc...)

Technical Data	
SKU/Model	AI527/ZD2319-30L-1500W
Input voltage rating	230-240V~ 50/60Hz
Maximum wattage from power take off socket	1400W
Input power	1500 W
Max. vacuum pressure	19 kPa
Max. airflow	38 L/sec
Tank volume	30 L
Dry vacuum volume	19 L
Wet vacuum volume	19 L
Protection class	I / ⏚
Weight(approx.)	8.05 kg
IP rating	IP24
Cable	H05VV-F /3X1.5mm^2, 5.5m, BS plug

EXPLANATIONS AND SYMBOLS, CAUTIONS AND WARNINGS

Warning!

Read the instructions.

Wear eye protection.

Wear a dust mask.

Wear hearing protection.

Wear protective gloves.

Wear face protection.

Wear tight-fitted protective clothes.

Switch the product off and disconnect it from the power supply before assembly, cleaning, adjustments, maintenance, storage and transportation.

Keep bystanders away.

Objects thrown by the product could hit the user or other bystanders. Always ensure that other people and pets remain at a safe distance from the product when it is in operation. In general, children must not come near the area where the product is.

Class I tool

The product complies with the applicable European directives, and an evaluation method of conformity for these directives was done.

Recycle unwanted materials instead of disposing of them as household waste. All tools, hoses and packaging should be sorted, taken to the local recycling centre and disposed of in an environmentally safe way.

The product complies with the applicable UK directives and an evaluation method of conformity for these directives was followed.

IMPORTANT SAFETY WARNINGS

WARNING! Read all safety warnings, instructions, illustrations and specifications provided with this power tool.

Failure to follow all instructions listed below may result in electric shock, fire and/or serious injury.

Save all warnings and instructions for future reference.

The term 'power tool' in the warnings refers to your mains-operated (corded) power tool or battery operated (cordless) power tool.

This appliance can be used by children aged 8 years and above and persons with reduced physical, sensory, or mental capabilities, or lack of experience and knowledge, if they have been given supervision or instruction concerning the use of the appliance in a safe way and understand the hazards involved.

Children must not play with the appliance. Cleaning and maintenance must not be undertaken by children without supervision.

If the supply cord is damaged, it must be replaced by the manufacturer, its service agent or similarly qualified persons in order to avoid a hazard.

1. IMPORTANT: Read the operating instructions before assembling and using for the first time.
2. Check that the mains voltage is the same as the mains voltage specified on the rating plate.
3. Pull out the power plug in the following circumstances: Whenever the appliance is not in use, before opening the appliance, and before all cleaning and maintenance work.
4. Never clean the appliance with solvents.

5. Never pull the plug out of the socket by pulling the cable.
6. Never leave the appliance unattended when ready for use.
7. Keep away from children and pets.
8. Take care to ensure that the power cable does not get damaged by being run over, crushed, pulled or similar.
9. Do not use the appliance if the power cable is in less than perfect condition.
10. If the power cable has to be replaced, the replacement must comply with the design specifications of the manufacturer.
11. Never vacuum the following: Burning matches, smoldering ash and cigarette butts, combustible, caustic, flammable or explosive substances, vapour or liquids.
12. This appliance is not suitable for vacuuming dust, some dust created by power sanding, sawing, grinding, drilling and other construction activities contains chemicals known to cause cancer, birth defects or other reproductive harm.
13. Store the appliance in a dry indoor location.
14. Never use the appliance if it is damaged.
15. Have the appliance serviced only by an authorised after-sales service outlet.
16. Use the appliance only to carry out work for which it has been designed.
17. Take extra care when cleaning steps.
18. Use only genuine accessories and spare parts.
19. Keep children and other persons away from the electric tool while it is being used. Allowing yourself to get distracted can cause you to lose control of the tool.

Service

Have your power tool serviced by a qualified repair technician using only identical replacement parts. This will ensure that the safety of the power tool is maintained.

PRODUCT DESCRIPTION AND IDENTIFICATIONS

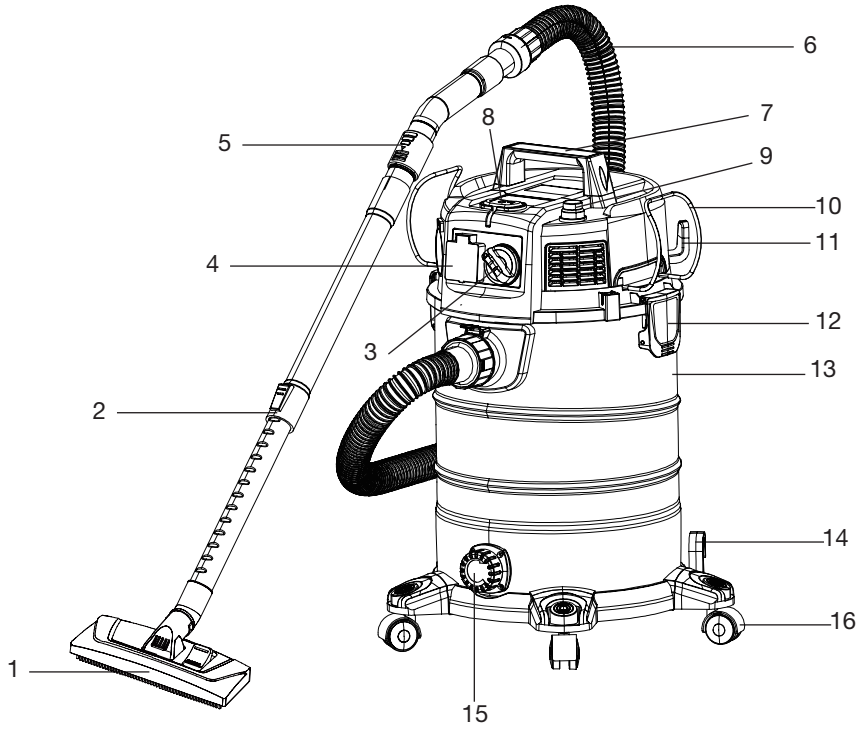

1. Dual action floor brush
2. Stainless telescopic tube
3. Airflow controller
4. Power extension socket
5. Curved handle with airflow regulator
6. Hose
7. Carry handle
8. On/Off switch
9. Self-cleaning button
10. Metal bracket
11. Upper power cord hook
12. Latch
13. Stainless steel tank
14. Lower power cord hook
15. Water outlet cover
16. Caster

Not all the accessories illustrated or described are included in standard delivery.

ASSEMBLY AND OPERATING INSTRUCTIONS

Intended Use: The wet and dry vacuum cleaner is designed for wet and dry vacuuming using the appropriate filter. The appliance is not suitable for the vacuuming of combustible, explosive or harmful substances.
The machine is to be used only for its prescribed purpose. Any other use is deemed to be a case of misuse. The user / operator and not the manufacturer will be liable for any damage or injuries of any kind caused as a result of misuse. Please note that our equipment has not been designed for use in commercial, trade or industrial applications. Our warranty will be voided if the machine is used in commercial, trade or industrial businesses or for equivalent purposes.

WARNING! To prevent serious injury from accidental operation, turn the vacuum power switch off and unplug the appliance from its electrical outlet before performing any procedure in this section.
Before you connect the vacuum to a mains supply, make sure that the data on the rating/technical label is identical to the mains data.

Assembly instructions

1. Unclamp latches(12).

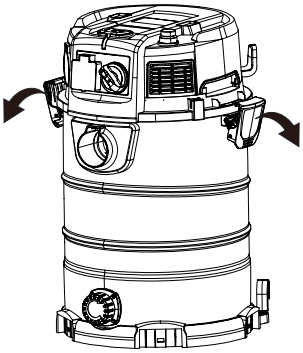

2. Lift the power head off the container.

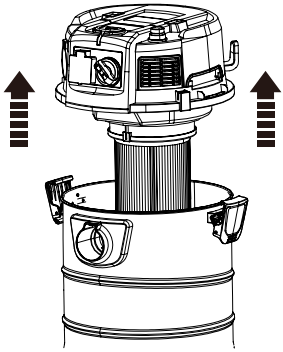

3. Remove all the contents from inside the container.
4. Drive in two screws with a screwdriver to install the carry handle(7).

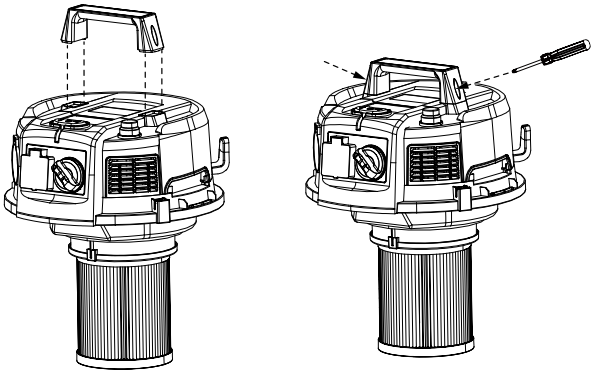

5. Squeeze the ends of the metal bracket(10). Put the metal bracket into the holder until both ends are sitting in the slots. Repeat the assembly on the other side.

   Note: Install the 2 metal brackets to retain the flexible hose when the product is transported, stored or not in use.

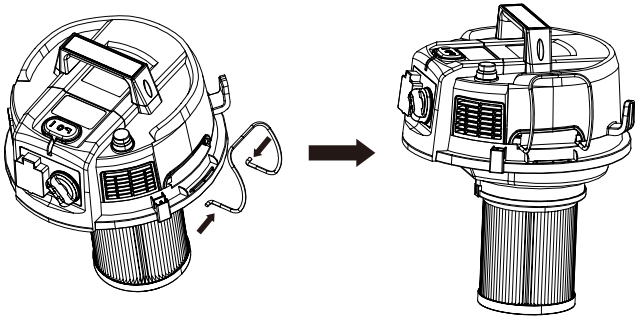

6. Insert the casters(16) into their sockets on the underside of the container and apply pressure until the casters snap into place.

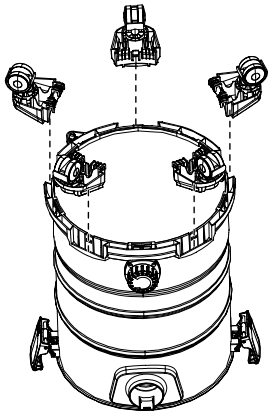

7. Attach non-woven dust bag (dry use only). Align the hole of the non-woven dust bag with the internal suction connector. Press down the non-woven dust bag to insert the internal suction connector into the hole of the non-woven dust bag until the seal ring is fitted into the circular rib.
   NOTE: Not for blowing. Please see dry or wet operation for correct use of filter.

Warning!
Assemble the non-woven dust bag incorrectly may cause dust leakage.

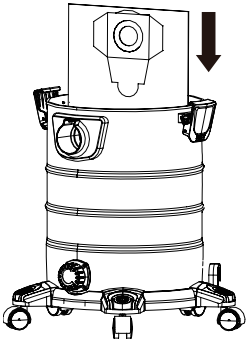

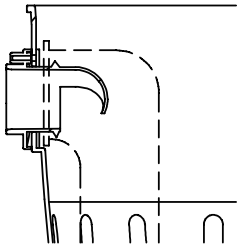

WARNING!
Take care when assembling the non-woven dust bag to avoid tearing.
Incorrect fitting of the non-woven dust bag may result in a loss of suction.
The non-woven dust bag is disposable.

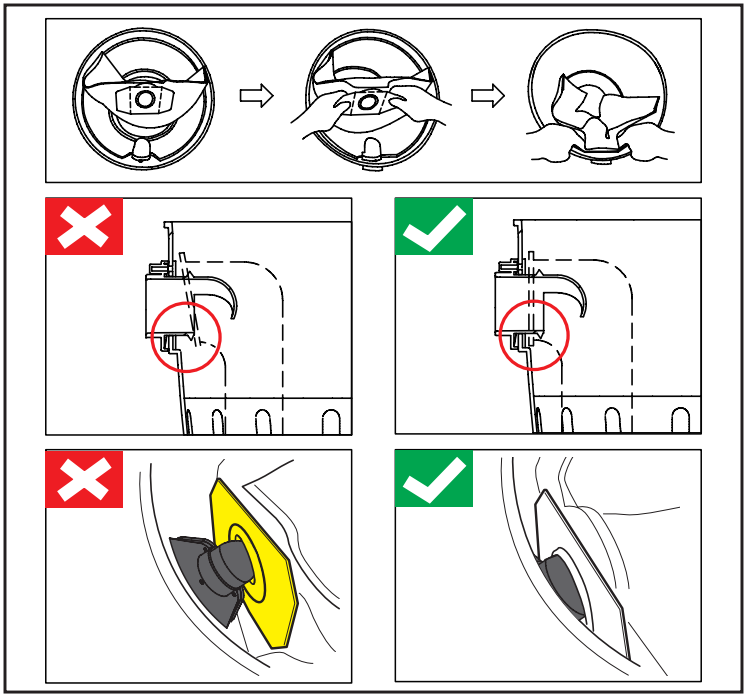

8. Place the power head back onto the container and secure it in place by clamping the latches shut.

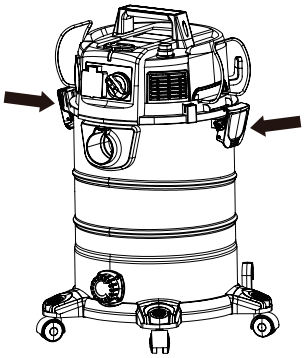

9. Align the hose coupler of the hose(6) with the vacuum connector. Push the hose coupler slowly into the vacuum connector gently until the lock button clicks into place. Check if the hose is connected properly by pulling the hose coupler.

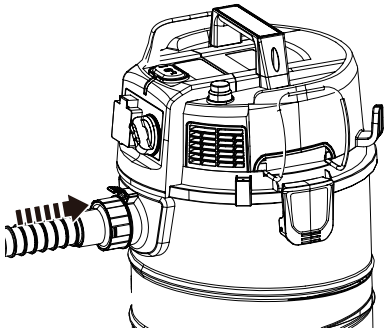

10. Align the hose coupler of the hose to the curved handle. Push the hose coupler until the hose coupler is securely connected to the curved handle.

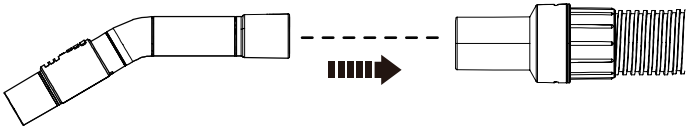

11. Align the curved handle to the telescopic tube(2). Push the curved handle until the coupler is securely connected to the tube.

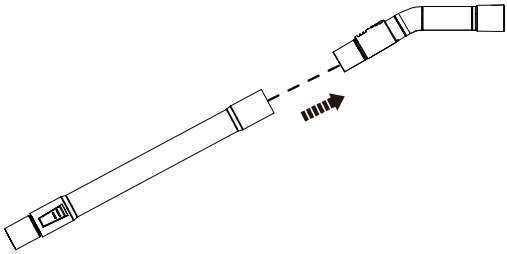

12. Attachments can be pushed onto the telescopic suction tube when required.

Dry vacuum operation

1. Ensure that the power cord is disconnected from the power outlet.

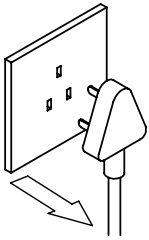

2. Remove the power head from the container as shown in the assembly instructions.
3. Firmly fit the non-woven dust bag (dry use only) as shown in the assembly instructions.
4. Fit the cartridge filter to the underside of the power head. Take care not to damage the cartridge filter. Rotate the filter lock clockwise to lock the filter in place.

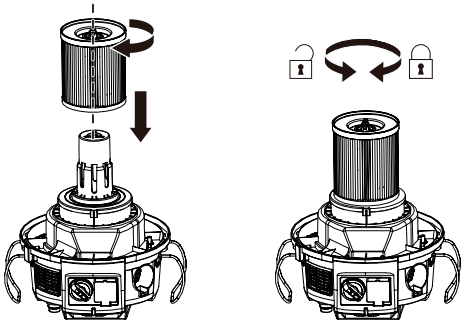

5. Place the power head back onto the container and lock the latch correctly.

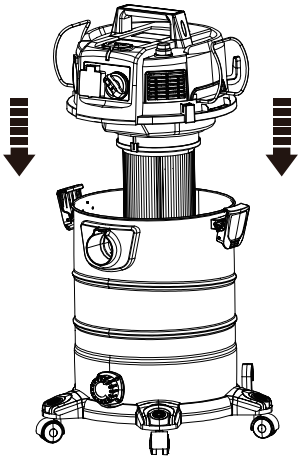

6. Connect the power cord to the power outlet.

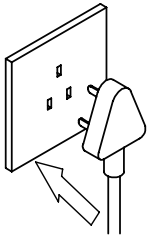

7. Switch on the vacuum and proceed to clean. (I=ON)

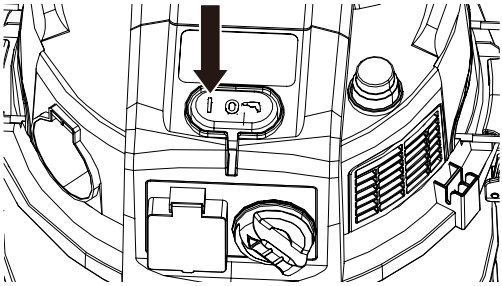

8. Switch off the vacuum before emptying. (O=OFF)

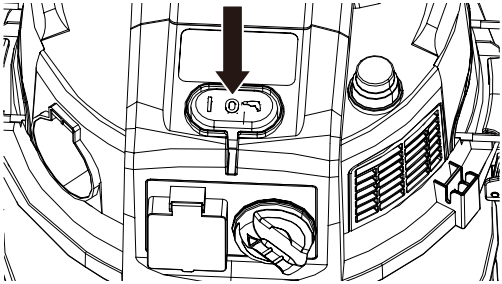

9. When emptying the container take care as this may be heavier than anticipated.
10. Clean filters and change if necessary.

Wet vacuum operation

IMPORTANT

When vacuuming large volumes of liquid, do not immerse the nozzle completely in the liquid; leave a gap at the tip of the nozzle opening to allow for air inflow. The machine is fitted with a float valve that stops the suction when the container reaches its maximum capacity, and an increase in motor speed will be heard. When this happens, turn off the machine, disconnect from power supply and empty the liquid into a suitable receptacle or drain. To continue vacuuming, refit the power head to the container. After wet vacuuming, turn the machine off and remove plug from power supply. To prevent corrosion, empty the container, clean and dry the inside and outside of the container and remove the foam filter and allow to air dry before storage.

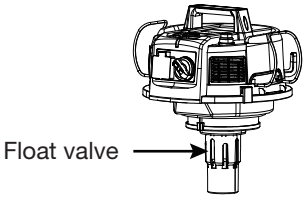

The float valve is a safety feature. Do not attempt to remove or modify this in any way. If the cleaner should overturn during wet operation, switch off immediately and return it to an upright position. Wait for the valve to reset before commencing cleaning.

1. Ensure that the power cord is disconnected from the power outlet.

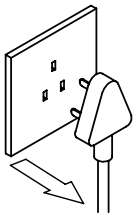

2. Remove the power head from the container as shown in the assembly instructions.
3. Fit the foam filter (wet use only) to the underside of the power head. Take care not to damage the filter.

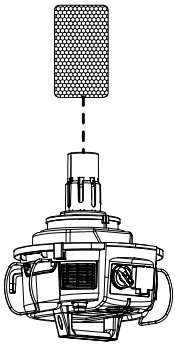

4. Put the power head back to the container and lock the latch correctly.

5. Switch on the vacuum and proceed to clean. (I=ON)

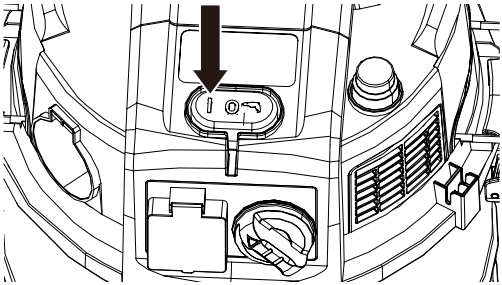

6. Switch off the vacuum before emptying. (O=OFF)

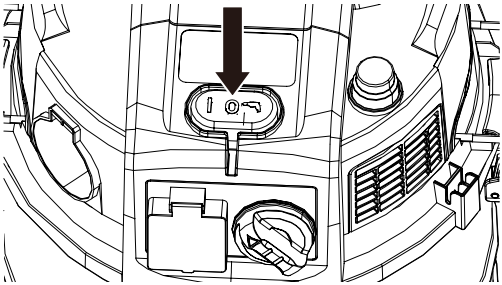

7. When emptying the container take care as this may be heavier than you think. You can also open the water outlet cover(15) to empty the tank.

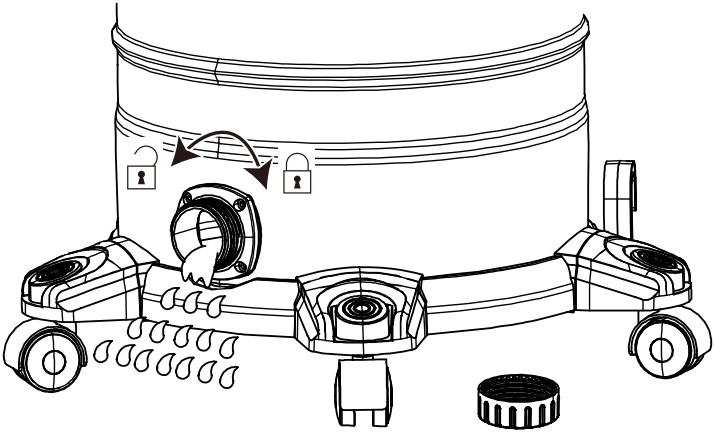

8. Clean the tank and filter if necessary.

Cartridge Filter – For dry applications

Use the cartridge filter in position over the lid cage for most general dry material pick up.
Use the cartridge filter to collect particles that are not already caught by the dust bag.
Always assemble the cartridge filter onto the power head for dry vacuuming operations.
Operating the product without the cartridge filter can damage the motor unit.

Clean cartridge filter

WARNING!
Check the cartridge filter regularly for damage and deformation. A damaged or deformed filter can not be cleaned and must be replaced. This is necessary to maintain the functionality of the product and to protect the product from damage.Only use replacement filters from authorised resellers. Filters that are not compatible with the product can lead to injury and product damage.

Inspect the cartridge filter after each use.
Replace it with a new one if necessary.
Clean the cartridge filter:

a) Before washing, give the filter a firm but even tap to dislodge large visible dust particles, reducing the burden of subsequent washing. Tap while slowly rotating the filter to ensure dust in all folds and crevices is dislodged. For particularly stubborn stains, gently scrub the surface with a soft brush first, then tap again.
b) Rinse (from the inside of the filter) with clear water to wash the cartridge filter frequently and allow to dry completely. Do not wait until the filter is completely dirty.

We recommend inspecting the filter after each use. Clean the cartridge filter at least once a month to maintain optimal vacuum performance. Households with pets or allergies should clean every 1-2 weeks. For heavy usage or dusty environments, clean after each use.

NOTE: Do not use chemical, alkaline, abrasive or other aggressive detergents or disinfectants to clean the dust bag and cartridge filter as they might be harmful to its surfaces/material.
Do not use a high-pressure water gun or hot water to avoid damaging the filter surfaces/ material.
After rinsing, gently tap the outer surface of the filter to shake off residual dirt, then place it in a cool, ventilated area to air-dry completely (approximately 24 hours). Do not expose to direct sunlight or use artificial drying methods.
If there is stubborn dirt on the outer surface of the filter, first scrub the surface lightly with a soft-bristled brush, then rinse from the inside out.
After rinsing, gently tap the outer wall of the filter to help drain residual water and accelerate drying.

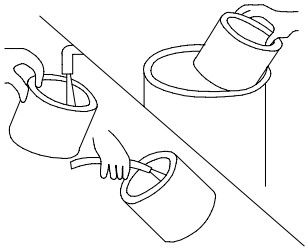

c) The machine also is equipped with self-cleaning function. After each use, operate the machine as follows:
   i. Connect the mains plug to a suitable mains supply.
   ii. Set the on/off switch to position I.
   iii. Turn the airflow controller(3) to MAX position.
   iv. Block the hose outlet with a wall or the ground.
   v. Press the self-cleaning button(9) 5 times.

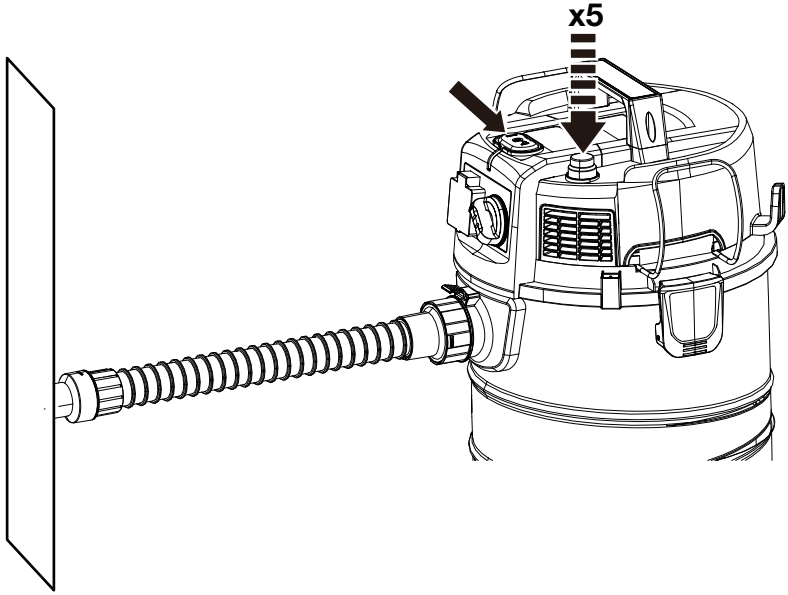

WARNING: Firmly grip hose at all times. Sudden pressure buildup when blocking the outlet can cause violent hose whipping.

Foam filter for wet applications

Use the foam filter during wet vacuuming operations. Operating the product without the foam sleeve can damage the motor unit.

NOTE: Do not use chemical, alkaline, abrasive or other aggressive detergents or disinfectants to clean the foam filter as they might be harmful to its surfaces/material.

Inspect the foam filter regularly. Replace it with a new one if necessary. Wash the foam filter frequently, with clear water. Do not wait until the sleeve is completely dirty. We recommend inspecting the sleeve when the product does not reach a sufficient suction power.

BLOWING OPERATION

IMPORTANT!

Before commencing please ensure you have read and understood all the safety instructions.

1. Ensure that the power cord is disconnected from the power outlet. No filter is required for blowing operations. Ensure that the container is completely empty before commencing.

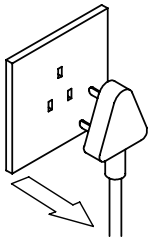

2. Remove the hose from the vacuum port and insert firmly into the air outlet.

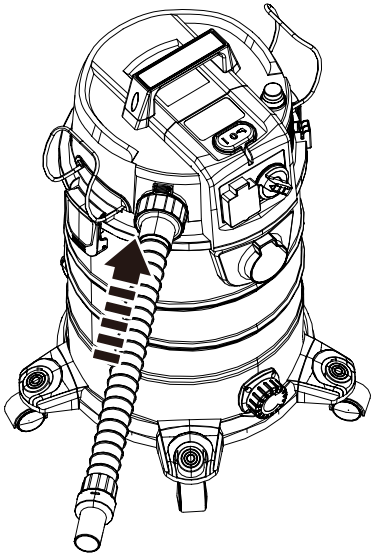

3. Select the most appropriate attachment for the task you wish to perform.
4. Connect the power cord to a suitable power outlet.

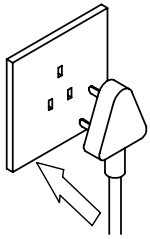

5. Before switching on, make sure you have a firm hold of the hose end.

6. Switch on the vacuum and proceed to clean. (I=ON)

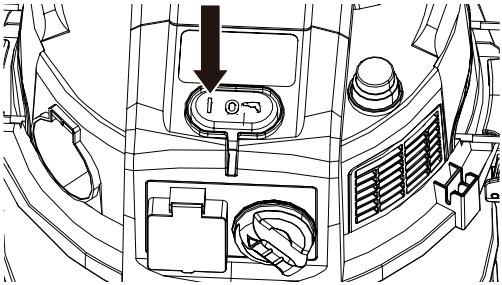

7. If blowing out dusty environments, always wear a suitable dust mask.
8. Protect eyes with suitable safety goggles and ensure no one else is nearby when operating.

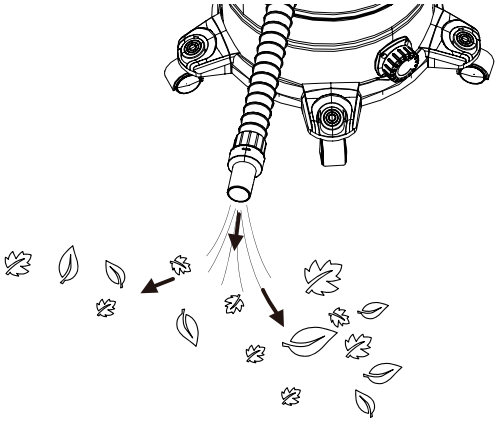

VACUUM AND BLOW AIRFLOW ADJUSTMENT

The airflow can be controlled by setting the min / max adjustment switch(5) to the desired speed.

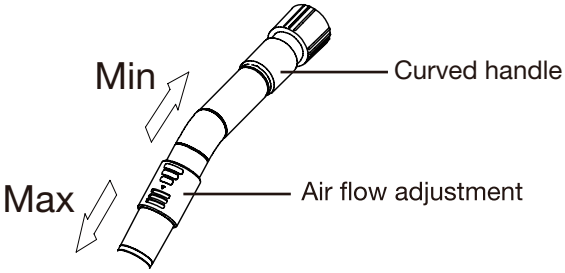

Power tool take off socket operation

Input voltage rating	230-240V~ 50/60Hz
Max Wattage from Motor	1500W
Max Wattage from power take off socket	1400W

This vacuum cleaner has a power take off feature which permits the cleaner to be coupled with a power tool, providing dust extraction.
To operate the power take off feature align the hose adaptor with the hose if necessary, align the hose with the power tool, insert the plug of power tool into the socket(4) located in the lid of the cleaner. Once the plug is inserted, switch the vacuum cleaner on by using the ☜ position.
The vacuum cleaner will now be operated in approx 1-2 second after power tool switch on. Please note that when the power tool is switched off, the vacuum cleaner will continue to run for approx 6-7 seconds. This ensures any debris is cleared from the pipe.

1

2

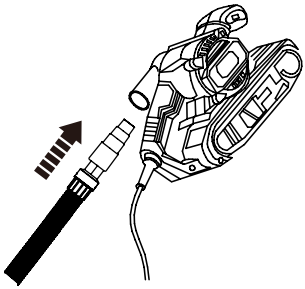

3

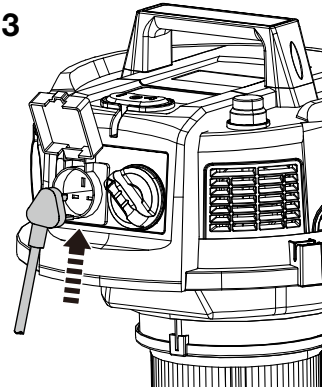

4

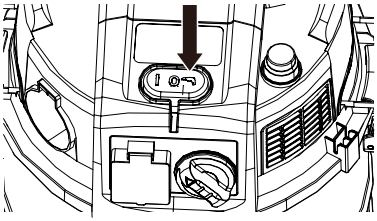

WARNING!
Do not plug any tool or appliance rated over the maximum wattage for the receptacle as noted in the chart above into the electrical socket on the vacuum cleaner.

To reduce the risk of injury, additional power tool must be turned (O) OFF before placing on/off switch in the position. (NEVER LEAVE THE UNIT RUNNING OR PLUGGED IN UNATTENDED).

Air flow controller

This vacuum cleaner is equipped with an airflow controller. Turn the airflow controller to adjust the airflow.

Setting	Airflow
MIN	Minimum airflow
MAX	Maximum airflow

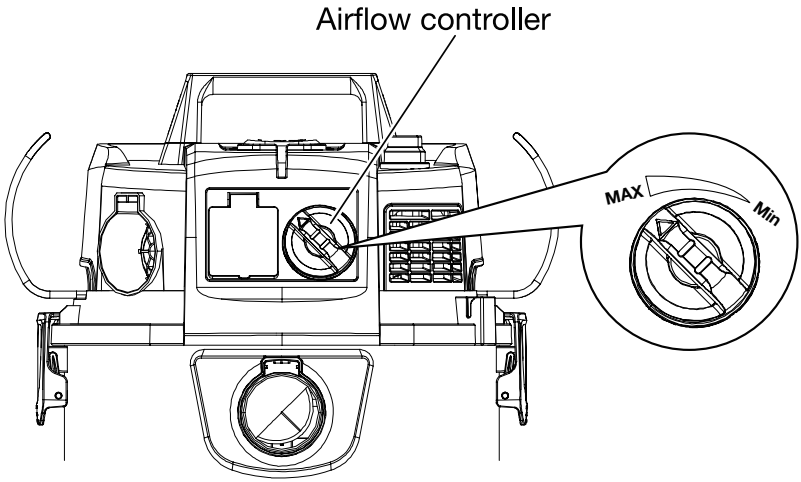

CARE AND CLEANING

IMPORTANT:
Make sure that the tool has been thoroughly cleaned before storing it in a clean, dry and safe place, out of the reach of children.

Remove the plug from the power outlet before commencing any maintenance.

After wet vacuuming, always empty, rinse and dry the container, hose and attachments. If vacuuming sticky spills, clean the tank and attachments with warm soapy water.

The foam filter can be cleaned using soapy water. Rinse and air dry for at least 24 hours. Take care when cleaning as small wood, metal or glass particles could get trapped in this filter. Check airways on hose and attachments to ensure there are no blockages.

Never use chemical cleaners or an abrasive cloth to clean the vacuum, use a mild detergent and warm water. Dry with a soft dry cloth.

Do not oil the motor.

Store in a dry place.

Serviceable parts can be bought instore or online from Toolstation: www.toolstation.com

You can use the various storage sockets or the brackets on the machine to store accessories.

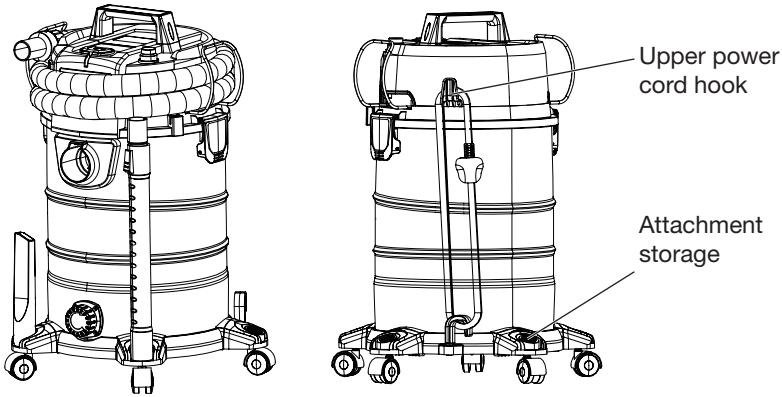

Serviceable parts can be bought in store or online from Toolstation: www.toolstation.com

SKU: AK617 Wessex 30L Wet & Dry Vacuum Cleaner Non-woven Dust Bag
SKU: AK620 Wessex 30L Wet & Dry Vacuum Cleaner Cartridge Filter
SKU: AK618 Wessex 30L Wet & Dry Vacuum Cleaner Foam Filter

TROUBLESHOOTING

Use this section to help you to try and solve any problems you may have:

PROBLEM	POSSIBLE CAUSES	REMEDIES
Product does not start	Not connected to power supply	Connect to power supply
	Power cord or plug is defective	Check by a specialist electrician
	Other electrical defect in the product	Check by a specialist electrician
Product does not reach full power	Extension cord not suitable for operation with this product	Use a proper extension cord
	Power source (e.g. generator) has too low voltage	Connect to another power source
	Air vents / air inlet / air outlet are blocked	Clean the air vents / air inlet / air outlet
	Activated safety valve / too much water in the tank	Drain excess of water from the tank
The vacuum will stop picking up dust/water.	Activated safety valve / too much water in the tank	Let the product cool down and then drain excess of water from the tank
Unsatisfactory result	Attachment not suitable for working surface	Use proper attachment
	Dust bag is full	Replace with a new dust bag
	Dust bag is damaged	Replace with a new dust bag
	Dust filter damaged	Replace with a new dust filter
	Attachment / extension tube(s) / hose not well connected	Check and reconnect the involved part(s)
	Attachment / extension tube(s) / hose / handle / air inlet blocked	Remove the blockage(s)
	Attachment / extension tube(s) / hose / handle / air inlet defective	Replace involved part with a new one
Power tool take-off socket does not work.	Power tool wattage exceeds max power 1400W	Check the wattage is compatible with the power tool take off socket.
	Incorrect operating mode selected.	Check the wattage is compatible with the power tool take off socket.

PROBLEM	POSSIBLE CAUSES	REMIDIES
Dust not being retained in the vacuum (dry vacuuming configuration)	Worn dust bag / dust filter	Replace with a new suitable part
	Dust bag / dust filter not properly attached	Check and re-attach properly
	Defective attachment / extension tube / hose / handle / air inlet	Replace involved part with a new suitable one
Excessive vibration or noise	Attachment / extension tube(s) / hose not properly connected	Check and re-connect
	Loose screws/bolts/nuts on handle or caster	Tighten screws/bolts/ nuts

NOTE: IF YOU EXPERIENCE A PROBLEM WITH YOUR APPLIANCE, PLEASE DO NOT ATTEMPT TO OPEN OR REPAIR THE APPLIANCE YOURSELF. DOING SO MAY VOID THE WARRANTY AND COULD CAUSE DAMAGE OR PERSONAL INJURY. IF THE PROBLEM STILL PERSISTS, PLEASE CONTACT US BY REFERRING TO THE SERVICE & SUPPORT INFORMATION ON THE FOLLOWING PAGE.

DECLARATION OF CONFORMITY / PERFORMANCE

Product Code: AI527/ZD2319-30L-1500W
Product Description: Wessex 30L Wet & Dry Vacuum Cleaner

1. Toolstation (company number 04372131)
   This declaration of conformity is issued under the sole responsibility of Toolstation

2. Object of the declaration

The object of the declaration described above is in conformity with the relevant Community harmonisation legislation:

- Electromagnetic Compatibility Regulations 2016 2014/30/EU
- Electrical Equipment (Safety) Regulations 2016 2014/35/EU
- The Restriction of the Use of Certain Hazardous Substances in Electrical and Electronic Equipment Regulations 20122011/65/EU&(EU)2015/863

3. References to the relevant standards used or references to the specifications in relation to which conformity is declared:

BS EN 60335-1:2012/A16:2023
BS EN 60335-2-2:2010/A1:2013
BS EN 62233:2008
BS EN IEC 55014-1:2021
BS EN IEC 55014-2:2021
BS EN IEC 61000-3-2:2019/A2:2024
BS EN 61000-3-3:2013/A2:2021

4. Additional information:
   Signed for and on behalf of Toolstation Limited

ENVIRONMENTAL INFORMATION

The symbol on the product or its packaging indicates that this product must not be disposed of with your other household waste. Instead,it is your responsibility to dispose of your waste equipment by handing it over to a designated collection point for the recycling of waste electrical and electronic equipment. The separate collection and recycling of your waste equipment at the time of disposal will help conserve natural resources and ensure that it is recycled in a manner that protects human health and the environment. For more information about where you can drop of your waste for recycling, please contact your local authority, or where you purchased your product.

WARRANTY

Toolstation products deliver reliable service for normal, household use in domestic settings. All Toolstation products are individually tested before leaving the factory.

Your product is under warranty for 2 years from the date of purchase or the date of delivery of the product, if later.

The warranty is subject to the following provisions:

- The warranty does not cover accidental damage, misuse, parts, knobs, or consumable items.
- The product must be correctly installed and operated in accordance with the instructions contained in this manual.
- It must be used solely for domestic purpose.
- The warranty will be rendered invalid if the product is re-sold or has been damaged by inexpert repair.
- Specifications are subject to change without notice.
- The manufacturer disclaims any liability for incidental or consequential damages.
- The warranty is in addition to, and does not diminish your statutory or legal rights.

CUSTOMER SUPPORT

www.coreservice.co.uk
Call us +44 01904 947568
Email: support@coreservice.co.uk

Made in China

wessex electrical

Thank you for purchasing a Wessex Electrical product, distributed by Toolstation Limited. Our products are developed and tested to deliver reliable performance while meeting high standards of safety and quality.

Before using your product, please read the user manual carefully. It provides important guidance on safe operation, correct use and routine maintenance. We recommend keeping this document for future reference to help ensure continued safe and effective use.

Your Wessex Electrical product is supplied with a 2 year manufacturer's warranty. If a fault occurs within this period due to manufacturing or material defects, please return the product to Toolstation, the retailer from which it was originally purchased. For further product support, please see the reverse of this leaflet.

WARRANTY 2

This Wessex Electrical product is covered by a 2-year warranty from the date of purchase. In the event of a fault, the retailer should be contacted in the first instance.
This warranty does not apply to:

- Wear resulting from normal use
- Damage caused by misuse, neglect, or improper operation
- Failure to carry out regular or recommended maintenance
- Consumable components, including batteries
- Accidental damage or impact
- Cosmetic wear or surface damage
- Damage resulting from not following the instructions provided
- Loss of use or indirect losses

This warranty is provided in addition to, and does not affect, your statutory consumer rights.
The warranty is valid within the UK only.