ROKTOR

ORIGINAL USER INSTRUCTIONS

24L OIL-FREE AIR COMPRESSOR

SKU: AI765

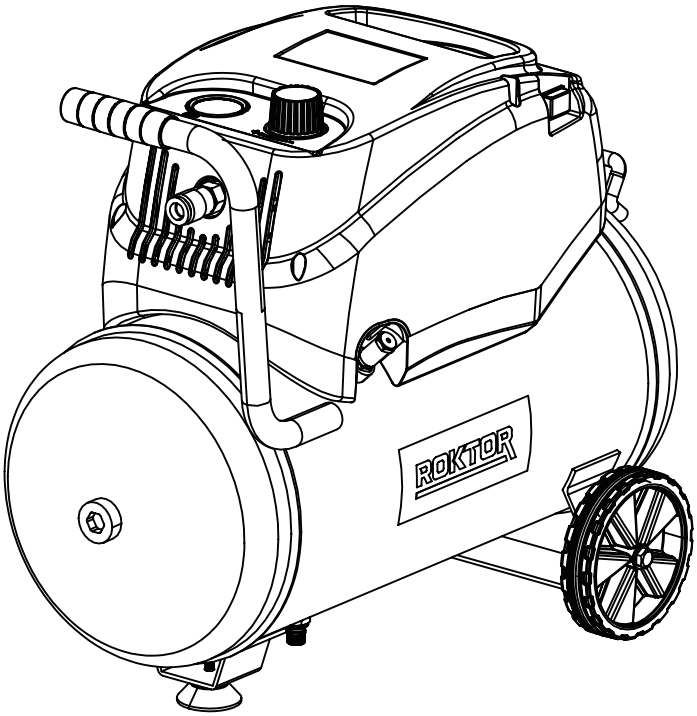

READ BEFORE USE
PLEASE KEEP THESE INSTRUCTIONS FOR FURTHER REFERENCE

CONTENTS

- WHAT'S IN THE BOX ---------- 3
- SPECIFICATIONS ---------- 4
- EXPLANATIONS AND SYMBOLS, CAUTIONS AND WARNINGS ---------- 4
- IMPORTANT SAFETY WARNINGS ---------- 6
- PRODUCT DESCRIPTION AND IDENTIFICATIONS ---------- 11
- ASSEMBLY AND OPERATING INSTRUCTIONS ----------12
- CARE AND CLEANING ---------- 17
- TROUBLESHOOTING ---------- 18
- DECLARATION OF CONFORMITY / PERFORMANCE ---------- 19
- ENVIRONMENTAL INFORMATION ----------20
- WARRANTY ----------20
- CUSTOMER SUPPORT ---------- 21

WHAT'S IN THE BOX

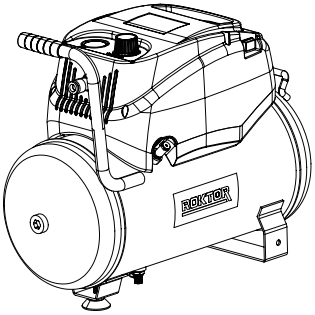

Air compressor

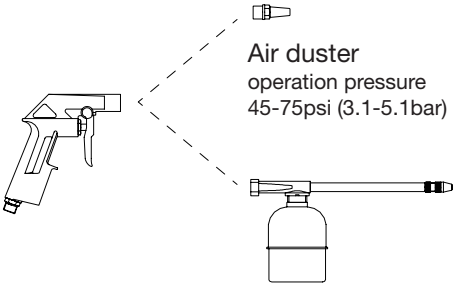

Air duster
operation pressure
45-75psi (3.1-5.1bar)

Washing gun
operation pressure
30-55psi (2-3.7bar)

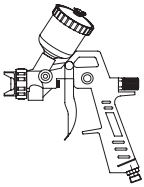

Spray gun
operation pressure 45-55psi
(3.1-3.7bar)

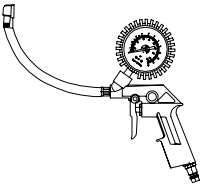

Inflating gun
with gauge

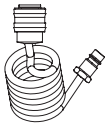

Air hose
size 5mm x 8mm x 5m

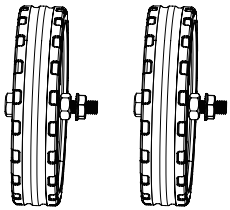

Wheel x 2
(nuts and bolts pre-assembled)

If you do not have all these items, please contact:
www.coreservice.co.uk
Hotline: +44 01904 947568
Email support@coreservice.co.uk

SPECIFICATIONS

TECHNICAL DATA

SKU/Model	AI765 / EZ-1524CW-1
Input voltage rating	220-240 V~ 50Hz
Rated power	1200W (S3/25%)
Max. pressure	8 bar
Tank volume	24L
No Load Speed (rpm)	3800
Measured Sound Power Level	96 dB(A)
Declared Guaranteed Sound Power Level	97 dB(A)
Weight (approx.)	15.5 kg
Protection degree	IP30
Protection class	I / ⏚
Cable	H05VV-F /3X0.75mm^2, 2m, BS plug

EXPLANATIONS AND SYMBOLS, CAUTIONS AND WARNINGS

Warning!

Read the instructions.

Wear eye protection.

Wear a dust mask.

Wear hearing protection.

Wear protective gloves.

Wear face protection.

Wear tight-fitted protective clothes.

Warning! Electric voltage. Keep the power cable away from the rotating blade! Do not move the device over the power cable.

Warning of hot parts. The surfaces of the compressor may heat up during operation.

The symbol shows the maximum sound power level LwA.

Class I tool

The product complies with the applicable European directives, and an evaluation method of conformity for these directives was done.

Recycle unwanted materials instead of disposing of them as household waste. All tools, hoses and packaging should be sorted, taken to the local recycling centre and disposed of in an environmentally safe way.

The product complies with the applicable UK directives and an evaluation method of conformity for these directives was followed.

Do not expose the product to rain or wet conditions.

Warning: The compressor may start without warning.

Prohibition: Do not open the air outlet valve before the air hose is connected.

IMPORTANT SAFETY WARNINGS

WARNING! Read all safety warnings, instructions, illustrations and specifications provided with this power tool.

Failure to follow all instructions listed below may result in electric shock, fire and/or serious injury.

Save all warnings and instructions for future reference.

The term 'power tool' in the warnings refers to your mainsoperated (corded) power tool or battery operated (cordless) power tool.

This appliance can be used by persons with reduced physical, sensory, or mental capabilities, or lack of experience and knowledge, if they have been given supervision or instruction concerning the use of the appliance in a safe way and understand the hazards involved.

If the supply cord is damaged, it must be replaced by the manufacturer, its service agent or similarly qualified persons in order to avoid a hazard.

General safety warnings

1. Keep work area clean and well lit.
   - Disorganisation in your work area poses a risk of accident.
2. Take environmental factors into account.
   - Do not expose the compressor to rain.
   - Do not operate the compressor in wet or damp rooms.
   - Ensure that the work area is well lit.
   - Do not use the compressor if there is a risk of fire or explosion.
3. Protect yourself against electric shock.
   - Avoid contact between your body and earthed parts.
   - Power tool plugs must match the outlet. Never modify the plug in any way. Do not use any adapter plugs with earthed (grounded) power tools. Unmodified plugs and matching outlets will reduce the risk of electric shock.
   - This is a Class I appliance and must be earthed. It is fitted with an approved earthed plug and 3-core mains cable. It must only be plugged into a properly installed and earthed mains socket. Never remove or bypass the earth pin.
4. Keep other persons away.
   - Do not allow other persons, particularly children, to touch the compressor or power cord. Keep them away from your work area.
5. Store the compressor in a safe area.
   - The unused compressor should be stored in a dry, locked room out of the reach of children.

6. Do not overload your compressor.
   - It works better and more safely within the specified power range.
7. Wear suitable work clothing.
   - Do not wear any loose-fitting clothing or jewellery as it could be caught by moving parts.
   - It is recommended that you wear firm footwear when working outdoors.
   - If you have long hair, wear a hair net.
8. Use protective equipment.
   - Wear protective goggles and ear protection.
   - Use a breathing mask when performing dusty work.
9. Do not use the power cord for purposes other than the intended one.
   - Do not use the power cord to pull the mains plug out of the socket. Protect the cord against heat, oil and sharp edges.
10. Take good care of your compressor.
    - Keep your compressor clean to ensure that you can work safely and effectively.
    - Follow the maintenance guidelines.
    - Check the power cord and the mains plug of the compressor regularly and have it replaced by a qualified professional in case of damage.
    - Check the extension cords regularly and replace them if they are damaged.
    - Keep the handles dry, clean and free of oil and grease.
11. Remove the mains plug.
    - When not using the compressor, before performing maintenance and when changing tools.
12. Prevent accidental start-up.
    - Make sure that the ON/OFF switch is set to the “OFF O” position when inserting the mains plug in the socket.
13. Use an extension cord when working outdoors.
    - When outside, only use an extension cord that is approved for such use and which is labelled accordingly.
14. Remain attentive.
    - Pay attention to what you are doing. Approach work in a reasonable manner. Do not use the compressor if you are tired or under the influence of drugs, alcohol or medication.
15. Check the compressor for any damages.
    - Before using the compressor, carefully check that all protective devices and easily damaged parts are functioning properly and as intended.
    - Check to make sure that moving parts are fully functional, that they are not jammed and that the parts are not damaged. All parts must be properly mounted and fulfil conditions to ensure proper operation of the compressor.

- Damaged protective devices and parts must be properly repaired or replaced by an authorised workshop to the extent not otherwise specified in the user manual.
- Damaged switches must be replaced by a customer service workshop.
- Do not use any compressors if the ON/OFF switch cannot be turned on and off.

16. ATTENTION!
    - For your own safety, only use accessories and auxiliary equipment specified in the user manual or recommended or specified by the manufacturer. Using fitted tools or accessories other than those specified in the user manual or recommended in the catalogue may pose a risk of injury for you.
17. Have your compressor repaired by an electrical technician.
    - This compressor complies with applicable safety regulations. Repairs may only be performed by an electrician who uses original replacement parts; otherwise, there is a risk of accident for the operator.
18. Protection against noise emissions.
    - Wear ear protection when using the compressor.
19. Replacing the power cord.
    - If the power cord is damaged, it must be replaced by the manufacturer or an electrician to avoid risks.

Safety instructions for the compressor

WARNING!

Danger of explosion!

Operating the compressor in an unsuitable location without adequate ventilation, at an unsuitable ambient temperature or in a room where dust, acids, vapours or flammable gases are present poses a risk of explosion.

1. The compressor must not be operated or stored in a room where there are dusts, acids, vapours or flammable gases.

   It could explode.
2. Keep flammable substances away from the compressor.
3. Only operate the compressor at an ambient temperature of at least +5 °C and no more than +40 °C. Starting the motor at temperatures below +5 °C poses a risk due to stiffness.
4. Make sure that the ambient temperature in an enclosed working environment does not exceed +25 °C to ensure that the compressor continues to function properly when continuously and completely filled with air.
5. Only operate the compressor in well ventilated rooms.
6. Do not spray water or flammable liquids on the compressor.

Risk of injury!

The compressed air tank of the compressor is under pressure during operation and in an unvented state.

Pressure may be released if the compressor is damaged, connections have been separated or if unsuitable or damaged lines are used. There is a risk of injury.

1. The compressor must not be used if the compressed air tank exhibits defects that pose a risk to the operators or third parties.
2. Check the compressed air tank for rust and damage before each use. If you identify any damage, contact our After Sales Support at the service address indicated on the warranty card.
3. Do not separate any connections while the compressed air tank is in a pressurised state.
4. Do not in any case drill holes in the compressed air tank, do not perform any welds on it and never deform it.
5. Never operate the compressor if the compressed air tank is damaged or deformed.
6. Make sure that the compressed air tank is always vented before separating the connections, connecting or removing pneumatic tools.
7. Switch the ON/OFF switch (pressure monitor) to the “OFF O” position once the compressor has been switched off.
8. Make sure that you only use pneumatic lines for compressed air that are suitable for the maximum pressure corresponding to the compressor.
9. Use a compressed air hose with a hose safety catch if you are working with pressures of 7 bar or more.
10. Do not attempt to repair damaged lines; instead, replace them.
11. Never transport the compressor if the compressed air tank is in a pressurised state.

Risk of electric shock!

A faulty electrical installation or excessive mains voltage may result in an electric shock.

1. Only connect the compressor if the mains voltage of the socket corresponds to the rating plate specification.
2. Only connect the compressor to an easily accessible socket so that you can quickly disconnect it from the power supply in the event of a fault.
3. Lay the power cord so that it does not pose a tripping hazard.
4. Do not kink the power cord and do not lay it over sharp edges.
5. When not in use, before transport and before performing cleaning or maintenance, always pull the mains plug out of the socket.
6. Do not use the compressor if the power corde or the mains plug is damaged. Have an authorised specialist workshop replace the damaged part with an original part. To do so, contact the After Sales Support at the service address indicated on the warranty card.

7. Operate the compressor with a residual current device (RCD) with a maximum release current of no more than 30 mA. Use of a residual current device (RCD) reduces the risk of electric shock.

Burn hazard!

The compressor and its air lines may become hot during operation, which can cause burn injuries.

1. Do not touch the compressor and the air lines during operation to avoid burns. Take appropriate safety precautions when operating the unit.

Risk of injury!

The compressed air jet, which you generate with the compressor, has a high pressure. Improper use of the compressor or the compressed air jet poses a risk of injury!

1. Do not point the compressed air jet or the pneumatic tools connected to the compressor at persons or animals.
2. Do not use the compressed air jet to clean clothing being worn.
3. Do not insert hands or objects through the compressor's protective guards.
4. Keep children and animals away from the functional area of the compressor.
5. When separating the hose coupling, hold the coupling element firmly with your hand to prevent injury caused by the hose springing back.
6. When working with the compressor, wear protective goggles and ear protection to protect yourself against debris and parts that are blown away.

Risk of damage!

Improper handling of the compressor may result in damage.

1. If possible, use wedges to secure the wheels of the compressor to prevent it from rolling away when you are using it.
2. Do not insert any objects in the compressor.
3. Only use the designated handles to transport the compressor.
4. Always keep the compressor in an upright position during transport and storage to prevent damage to internal components.

Service

Have your power tool serviced by a qualified repair person using only identical replacement parts. This will ensure that the safety of the power tool is maintained.

PRODUCT DESCRIPTION AND IDENTIFICATIONS

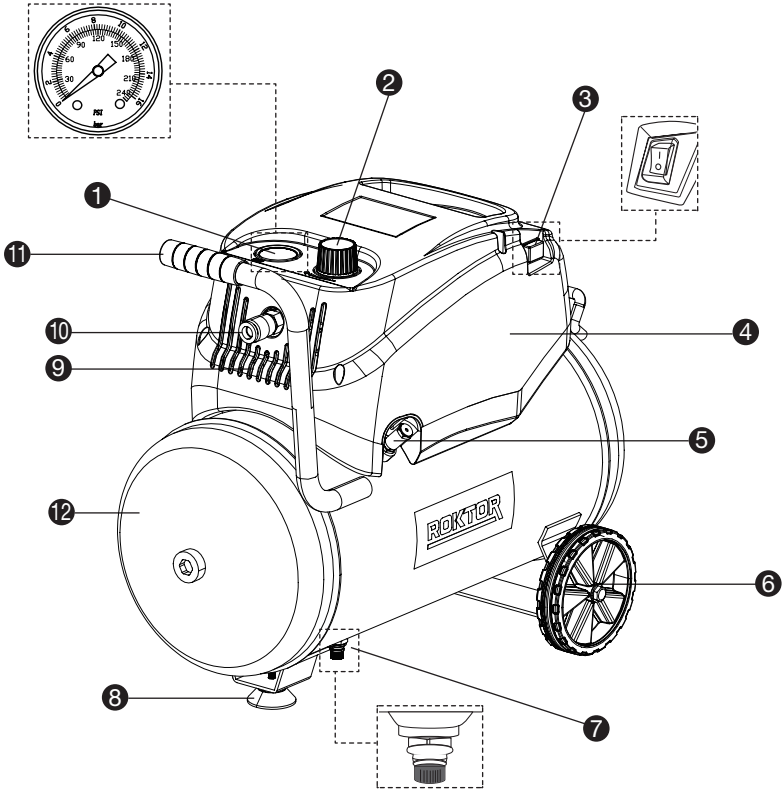

1. Pressure gauge
2. Pressure regulator
3. ON/OFF switch
4. Pressure vessel
5. Safety valve
6. Wheel
7. Drain valve
8. Rubber foot
9. Air vents
10. Quick-lock coupling (air outlet)
11. Carry handle
12. Pressure vessel

Not all the accessories illustrated or described are included in standard delivery.

ASSEMBLY AND OPERATING INSTRUCTIONS

Intended Use: This compressor has been designed for use with intermittent (not continuous) operation, with a max. duty factor of 25% (i.e. 2.5 minutes run and 7.5 minutes stop), considering ideal environmental condition (max temp 25°C).
Following these tips and performing regular maintenance will ensure optimal performance.
This device is intended for private use only and is not suitable for commercial use. Use the device only as described in this operating manual. Any other use is improper and may lead to product damage or even personal injury. This device is not a toy.
The manufacturer or retailer assume no liability for damage caused by improper or incorrect use.

WARNING! The product must be fully assembled before operation!
Do not use a product that is only partly assembled or assembled with damaged parts!
Follow the assembly instructions step-by-step and use the pictures provided as a visual guide to easily assemble the product!
Do not connect the product to power supply before it is completely assembled!

Assembly instructions

1. Open the packaging and remove the machine.

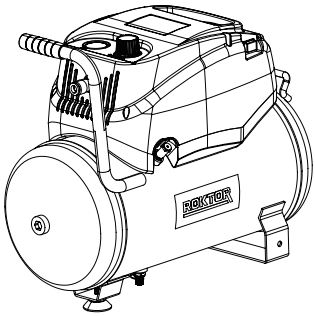

2. Remove the nut from the wheel as shown below.

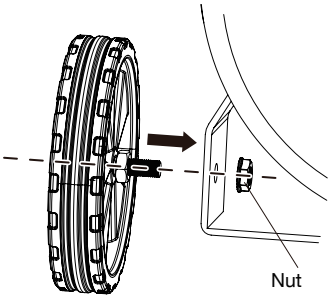

3. Align the wheel axle and insert the wheel axle onto the compressor frame then hand tighten and lock nut as shown. Tighten the locking nut with a suitable wrench to secure the connection. Do not over tighten.

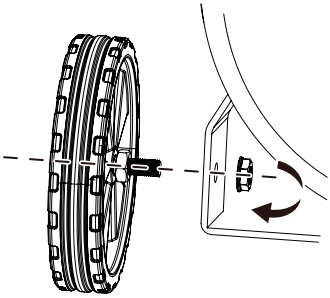

4. Repeat the wheel assembly on the other side. Ensure both wheels rotate smoothly.

Starting and Stopping

WARNING! Check the product, its power cord and plug as well as accessories for damage before each use. Do not use the product if it is damaged or shows wear.

1. Press the ON/OFF switch(3) to its **ON** position **I** to switch the product on.

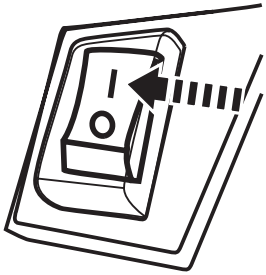

2. Press the ON/OFF switch(3) to its **OFF** position **O** to switch the product off.

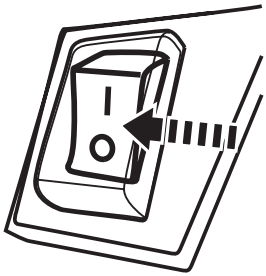

Operation

IMPORTANT!
Before commencing please ensure you have read and understood all the safety instructions.

WARNING! Make sure the ON/OFF switch is set to its **OFF** position **O** and then insert the plug into a properly installed socket.

1. Ensure that the power cord is disconnected from the power outlet.

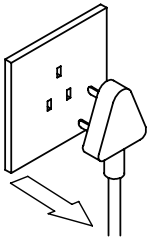

2. Connect the attachment tool you want to use onto the quick-lock coupling(10).

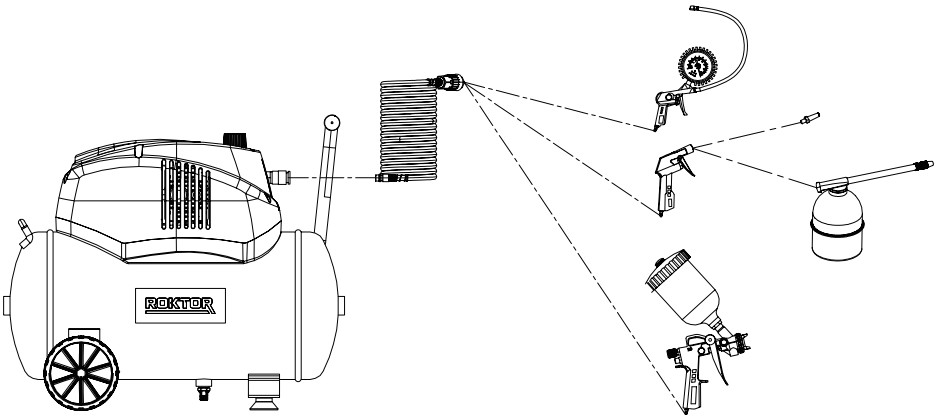

3. Check the drain valve(7) is fully closed, otherwise the compressor will not pressurise.

4. Connect the power cord to a suitable power outlet. Press the ON/OFF switch(3) to its **ON** position **I** to switch the product on.

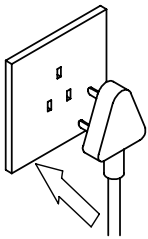

Note: As the product starts, pressure inside the vessel will rise to reach the maximum pressure.

5. Wait until the product stops (approximately 3 minutes). Then, carefully turn the pressure regulator(2) clockwise to adjust the output pressure. Strictly follow the maximum pressure ratings specified for the attachment tool being used. Verify the setting by reading the regulated pressure on the pressure gauge(1).

WARNING! RISK OF BURSTING AND INJURY!
The maximum tank pressure of this compressor is 8 bar. However, the supplied pneumatic accessories operate at a significantly lower pressure (e.g., the washing gun and spray gun operate at 2.0 - 3.7 bar). Always adjust the pressure regulator to the correct lower pressure before operating the accessory. Supplying high pressure to a low-pressure accessory may cause it to burst, resulting in serious personal injury.

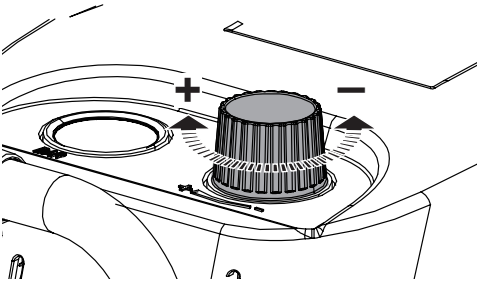

6. Turn the pressure regulator fully counterclockwise to close the air flow and press the **ON/OFF** switch to its **OFF** position **O** to switch the product off once the task is completed.
7. Disconnect the attachment tool used.

WARNING! The machine can become very hot during operation! Be careful when using this product and avoid contact with hot surfaces.

WARNING! The compressor may start without warning.

Safety valve

The safety valve (5) is factory-set and permanently sealed to ensure your safety. Should the internal pressure of the vessel go beyond the maximum permissible pressure rating, the safety valve will be triggered automatically to release excess pressure. Once the pressure falls back to the safe operating range, the safety valve will shut off on its own.

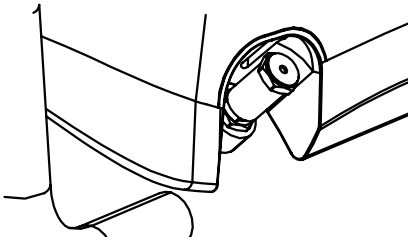

WARNING! NEVER TAMPER WITH THE SAFETY VALVE.
The safety valve is a critical safety device. Under no circumstances should you attempt to test, unscrew, adjust, or modify the safety valve. Any unauthorised tampering will void the warranty and may result in the valve failing to operate correctly, leading to a severe risk of tank rupture or fatal injury.

Do not attempt to discharge the tank using the safety valve. Always use the drain valve or the connected pneumatic tool to release pressure.

If the safety valve shows signs of damage, leaks continuously, or fails to function properly, stop using the compressor immediately. It must be inspected and replaced only by a qualified service professional.

Overload protection
This product's motor is fitted with an overload protection mechanism. Should the motor reach an excessive temperature of 140ºC, the device will shut down automatically.

1. Switch the **ON/OFF** button to the **O** (off) position to power off the product, then unplug it from the power supply. Rotate the pressure regulator counterclockwise to cut off air supply to the quick-lock coupling.
2. Disconnect the product from the power source completely and allow it to cool down for a full 10 minutes.
3. Carefully release any residual pressure in the attachment tool by operating it until no airflow can be detected, then disconnect the tool from the quicklock coupling. Identify and eliminate the root cause of the overload.
4. Reattach the tool to the quick-lock coupling, and verify that the connection is fully secured.
5. Reconnect the product to the power supply and press the ON/OFF switch to its on position **I**.
6. Perform a test to ensure the product runs smoothly before continuing further operation.

CARE AND CLEANING

IMPORTANT:
Make sure that the tool has been thoroughly cleaned before storing it in a clean, dry and safe place, out of the reach of children.

Remove the plug from the power outlet before commencing any maintenance.

Before and after each use, check the product and accessories (or attachments) for wear and damage. If required, exchange them for new ones as described in this instruction manual. Observe the technical requirements.

Condensation water
Condensation water accumulates inside the pressure vessel during use as a natural by product of operation. Accumulation of condensation water can cause internal corrosion and result in safety hazards.

1. Position a suitable receptacle directly beneath the pressure vessel.
2. Unscrew the drain valve from the drain port.
3. Once water ceases to drip from the opening, tighten the drain valve back into its original position to seal the pressure vessel. Ensure that the collected condensate is disposed of in strict compliance with local environmental regulations.

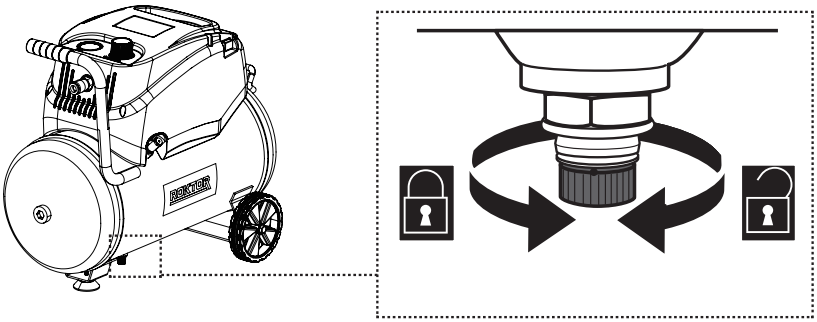

WARNING! Release all the pressure in the vessel before opening the drain valve. Drain the condensation water from the pressure vessel after each use! Corrosion can lead to weakening of the cylinder and may cause a danger to the user.

TROUBLESHOOTING

Use this section to help you to try and solve any problems you may have:

PROBLEM	POSSIBLE CAUSES	REMEDIES
Product does not start	Not connected to power supply	Connect to power supply
	Power cord or plug is defective	Check by a specialist electrician
	Other electrical defect to the product	Check by a specialist electrician
	Overloaded product	Disconnect the product and remove cause of overload
Product does not reach operating pressure	Air vents are blocked	Clean the air vents
	System is not airtight	Check and tighten all connections / valves
	Power source has too low voltage	Connect to another power source
Unsatisfactory result	Attachment not suitable for working surface	Check and tighten all connections / valves
	Insufficient pressure set on the pressure gauge	Increase set pressure according to technical specifications
	Obstructed air vents	Clean air vents
	Damaged pressure gauge	Have the pressure gauge replaced by a specialist
	Inflatable item is leaking	Repair the item before inflating again
Excessive vibration / noise	Bolts / nuts are loose	Tighten bolts / nuts
	System is not airtight	Check and tighten all connections / valves
	Damaged motor	Have the product checked by a specialist

NOTE: IF YOU EXPERIENCE A PROBLEM WITH YOUR APPLIANCE, PLEASE DO NOT ATTEMPT TO OPEN OR REPAIR THE APPLIANCE YOURSELF. DOING SO MAY VOID THE WARRANTY AND COULD CAUSE DAMAGE OR PERSONAL INJURY. IF THE PROBLEM STILL PERSISTS, PLEASE CONTACT US BY REFERRING TO THE SERVICE & SUPPORT INFORMATION ON THE FOLLOWING PAGE.

DECLARATION OF CONFORMITY / PERFORMANCE

Product Code: AI765/EZ-1524CW-1
Product Description: ROKTOR 24L Electric Oil-Free Air Compressor with 5pc Accessory Kit 230V

1. Toolstation (company number 04372131)
   This declaration of conformity is issued under the sole responsibility of Toolstation

2. Object of the declaration

The object of the declaration described above is in conformity with the relevant Community harmonisation legislation:

- Electromagnetic Compatibility Regulations 2016
  2014/30/EU
- Electrical Equipment (Safety) Regulations 2016
  2014/35/EU
- The Restriction of the Use of Certain Hazardous Substances in Electrical and Electronic Equipment Regulations 2012
  2011/65/EU&(EU)2015/863

3. References to the relevant standards used or references to the specifications in relation to which conformity is declared:

   EN IEC 55014-1:2021
   EN IEC 55014-2:2021
   EN IEC 61000-3-2:2019+A1:2021
   EN 61000-3-3:2013+A1:2019+A2:2021
   IEC 62841-1: 2014, COR1:2014, COR2:2015
   EN 62841-1: 2015+A11: 2022
   EN 1012-1: 2010

4. Additional information:
   Signed for and on behalf of Toolstation Limited

ENVIRONMENTAL INFORMATION

The symbol on the product or its packaging indicates that this product must not be disposed of with your other household waste. Instead,it is your responsibility to dispose of your waste equipment by handing it over to a designated collection point for the recycling of waste electrical and electronic equipment. The separate collection and recycling of your waste equipment at the time of disposal will help conserve natural resources and ensure that it is recycled in a manner that protects human health and the environment. For more information about where you can drop of your waste for recycling, please contact your local authority, or where you purchased your product.

WARRANTY

Toolstation products deliver reliable service for normal, household use in domestic settings. All Toolstation products are individually tested before leaving the factory.

Your product is under warranty for 2 years from the date of purchase or the date of delivery of the product, if later.

The warranty is subject to the following provisions:

- The warranty does not cover accidental damage, misuse, parts, knobs, or consumable items.
- The product must be correctly installed and operated in accordance with the instructions contained in this manual.
- It must be used solely for domestic purpose.
- The warranty will be rendered invalid if the product is re-sold or has been damaged by inexpert repair.
- Specifications are subject to change without notice.
- The manufacturer disclaims any liability for incidental or consequential damages.
- The warranty is in addition to, and does not diminish your statutory or legal rights.

CUSTOMER SUPPORT

www.coreservice.co.uk
Call us +44 01904 947568
Email: support@coreservice.co.uk

Made in China